SMART SOLUTION FOR TUNNEL LIGHTENING SYSTEM

[1]MANOJ S. KAVEDIA, [2]SUDHA GUPTA

[1,2]Department of Electronics, K.J. Somaiya College of Engineering
E-mail: profmanojkavedia@gmail.com, sudhagupta@somaiya.edu

Abstract- It takes hours to explain about conserving energy, but take seconds to actually conserve the energy. High-intensity Discharge (HID-Sodium) Lamps presently used for Tunnel light are based on principle of gas discharge, thus the intensity is can not controlled by reducing the voltage as the discharge path is broken after a particular voltage. Also the intensity control is done based on the sunlight outside the tunnel. Manual control is prone to errors and leads to energy wastages and manually dimming during mid night is impracticable. Also, dynamically tracking the light level is manually impracticable. The current trend is the introduction of automation and remote management solutions to control tunnel lighting. Remote management systems with automation technology allow control of lamps, adjustment of light levels, and lamp. LED plays a most important role in the energy conservation and environmental protection in lighting industry of 21st Century. And the ZigBee is the best wireless solution in this field due to its strong wireless network ability and lower power Light Emitting Diode (LED) based lamps will be soon replacing the HID lamps in Tunnel light. Thus intensity control is now possible by reducing the average voltage on sensing the movement and density of vehicles.

Keywords- HID, Tunnel, LED.

I. INTRODUCTION

Today main problem is the huge cost of energy, especially electricity, Also worlds research is going on to save the energy. Lighting consumes for around 20% of the world's total Electrical energy therefore, the efficient lighting can save lots of energy. Classic outdoor light systems like streetlight, skywalks, and corridor are widely spread out in around the world while they are inefficient regarding cost and electricity consumption. These are controlled with photocell/LDR or timer and there is no remote connection or monitoring or information about energy consumption. If faulty happened the outdated system cannot find it on real time.

Also there are places where uncontrolled system of lightening increases loss of energy. Places like Street Light, Sky walks, campus of school, college, companies etc. Out of these all major loss of energy is there is Tunnels because many times there is no vehicle and all light are on.

Hence concept of Tunnel Light Automation can be used to reduce energy consumption and maintenance costs. To save valuable power, the ON/OFF switches of the tunnel lights can be remotely re-programmed according to requirement. Use of Intelligent interconnection between devices can used to optimize the energy requirements by tracking the changes in light intensity outside and depending on traffic density.

The system deigned here utilizes wireless communication techniques and which provides real time surveillance of lamps may be individual or in group. The system can also be used to detect the faulty lamps in the control monitor and exhibit energy consumption of each lamp node. Also any number of new tunnel lights can be added to the existing infrastructure with simple and easy installation and modifications. They can detect vehicles by using US/IR/LASER/PRESSURE (Ultra Sonics/ Infrared) [2] and vehicles by multisensory array.

This paper follows the scope which is providing smart solution for application of tunnel lightings based on the Zigbee communication technique.

The main function of Local node monitors the sensors data and controls the duration of on/off lamp nodes based on the feedback information from lamp nodes. This information about the lamp status is transmitted in data frames from Zigbee protocol to a lamp node to control the light intensity, which is connected. Control equipment are achieved power energy saving ranging from 10% to 50%.

This system designed in such a way that it can drive both sodium lamp of high pressure and high power LEDs and must be capable to handle common demand in the network, e.g. dimming, on/off. This is can be achieved using PWM technique.

Software system is designed in VB.net user friendly GUI which will monitor the parameter , make a record of parameter and finally take the corrective action for intensity control.

Organization of paper is in 7 sections. The Section 2, describe about Zigbee protocol. Section 3 discuss on the work done in this field. The smart solution for tunnel light system is discussed in Section 4. Whereas section 5 discuss, the implementation of proposed system. Our aim is to build a flexible node which can work with classical light sources and high power

LEDs and this node continue its work if network was down. Result of the system implemented is discussed in section 6. Finally, in Section 7 concludes with the conclusion.

II. ZIGBEE (IEEE-802.15.4)

Zigbee is a typical wireless communication technology. Zigbee uses low rate, low-power digital radios based on an IEEE 802.15.4 standard for personal area networks. Compared to WPANs(Wireless personal area network), such as Bluetooth) Zigbee is simpler and less expensive. Zigbee is used for radio-frequency (RF) applications that require a low data rate, long battery life, and secure networking.

Zigbee has a defined rate of 250 kbps best suited for periodic or intermittent data or a single signal transmission from a sensor or input device.

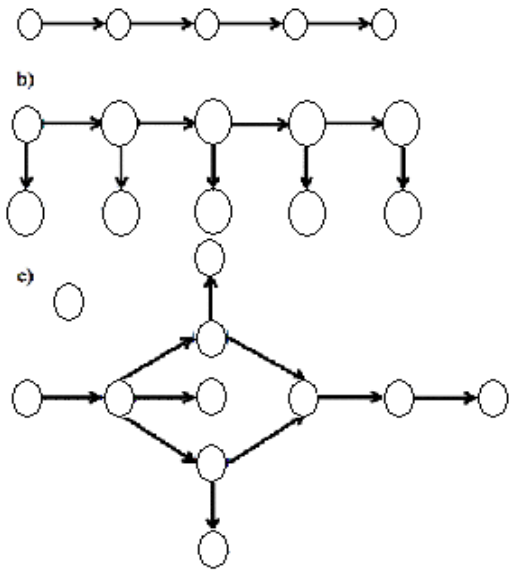

Fig. 1: Network topologies a) Linear network, b) Lamp on both side of tunnel, c) cross road [7]

It is Open standard protocol with no or negligible licensing fees, chipsets available from multiple sources, remotely upgraded firmware, fully wireless and low power, mesh networking to operate on batteries, low maintenance and larger network size with standard based high security. Zigbee is used for remote monitoring. Zigbee module can be used to control serial communication upto 100meters.

There are some network topologies which use to different places. Three types of network topologies are shown in Fig.1.

In proposed system the nodes are distributed and configured as router and there is just one node as coordinator. Nodes are designed in such a way that they can be easily joined to expand the network. For the system discussed these topologies are appropriate.

III. WORK DONE FOR STREET LIGHT CONTROL

There are several ways to implement a intelligent lighting system based on WSN. There are multiple choices depending on the technology used, protocols, type of control and others factor that can influence the lighting systems.

Due to the rapid growth of industry and cities, the industry of lighting systems has a fast development and is becoming complex. The paper presents the drawbacks of most developed systems for tunnel lighting. A new light control system is proposed which can overcome old systems drawbacks. The drawbacks found commonly in light control systems are difficulty of handling and difficulty of maintenance. To reduce these weak points in operating light control system, the authors designed a tunnel light control system by using Zigbee communication devices.

Maciej Mendalka et. al, present an intelligent street lighting system based on WSN. As a result they obtained a system designed to increase functionality of light installations. The proposed system is made of WSN nodes integrated with light sources based on high power LED diodes. Their platform enable new services such as telemetry, monitoring of noise, humidity, temperature, as well as services associated with the road information systems, intelligent transportation systems and intelligent roads.

The paper, presents a street lighting implementation based on photovoltaic panels. The system uses solar energy as primary source and batteries as secondary source. Lighting emitting diodes (LEDs) are employed as lighting source. This system is being presented as an alternative for remote localities, like roads and crossroads.

Wu Yue proposes in a street light control system able to detect environmental changes due to integrated sensors. The system has 2 function modes: the automatic timing control and a dynamic mode. Automatic timing is used to switch light on at a pre-determined time and keep them active a programmed time period. In dynamic mode the lights are activated when motion is detected. Simultaneously the system may act according to the actual determination of the sunlight degree of illumination and the degree of illumination control criterion.

Up to now work is done in field of tunnel light control. In the early days, lights were lit in the evening manually or depending on the external light intensity, they were then replaced by intelligent detection whether or not to switch them on by the control centre in sunrise and sunset. Although that was able to control the tunnel lights intelligently, the

sensitivity of sensors tend to drop due to long period of application, or they would maintain the streetlights in ON status if the sensors were covered with dust to cause unnecessary power wastage. In addition, in order to maintain normal operation of tunnel lights, it is necessary to dispatch somebody at a certain time interval, so as to patrol along the lane and to check whether there are any malfunctioned tunnel lights. Therefore, these would cause a great deal of resource wastage on maintenance perspective.

Ubiquitous computing or pervasive computing paradigm is used to describe smart environments. Now days there are so many applications used in this system which are useful for saving energy and light control. This system is mostly used for parking plot and street light control system for control light and directly control to the android or mobile phone. Some system sense the day light and turn on odd the lights. Some designed system use photocell or time for the same purpose.

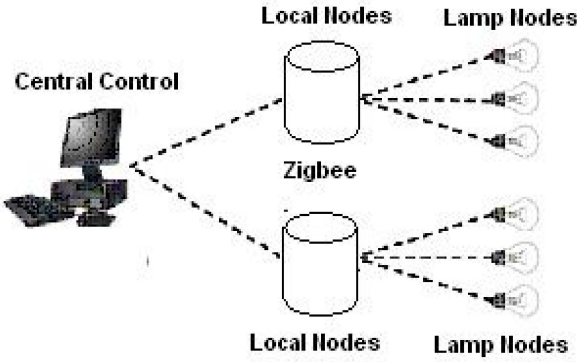

Fig. 2: Typical overview of Tunnel lights system

In the other hand, tunnel Light Automation can reduce energy consumption and maintenance costs. To save valuable power, the ON/OFF switches of the tunnel lights can be remotely re-programmed according to requirement. Intelligent interface devices can optimize the energy requirements by recording the changes in nightfall in different seasons. The system utilizes wireless communication techniques and offers real time surveillance of individual group of lamps. The system can represent the faulty lamps in the control monitor and exhibit energy consumption of each lamp node.

Thus, if we can change the current tunnel lights to LED versions, we are able to save a considerable amount of power, and achieve energy saving. Further energy conservation

IV. CONSIDERATIONS FOR SMART SOLUTION

From the study of the related work different technology has been explored to implement intelligent lighting systems. In table one a comparison between these kinds of communication approaches are shown in table I.

	PLC	ZWave	Zigbee
Data Rate (KBPS)	0.6250	40	250
Power Consumption	Very Good	Good	Very Good
Installation Cost	Good	Very good	Good
Max. number of Nodes	-	232	65536
Range	-	30m	10m-1.6km
Implementation	Good	Good	Best
Maintenance Cost	Good	Good	Very Good
Frequency	-	900Mhz	900MHz to 2.4GHz

Table I: Comparison of technologies available

The available PLC modules in market suffer from some disadvantages such high cost and no networking capabilities. Opposed of Zigbee technology, Z-wave technology has lower data rates and supporting limited nodes. The reason of for selection of Zigbee media are used mainly is that it is easy to install and maintain. Also installation additional transmission line are not needed, hence more economical than other media's installation.

V. PROPOSED SYSTEM

This system consists of tunnel lamp nodes, tunnel controller (local node), and Zigbee protocol and control center. Fig.3 shows the block diagram of lamp nodes.

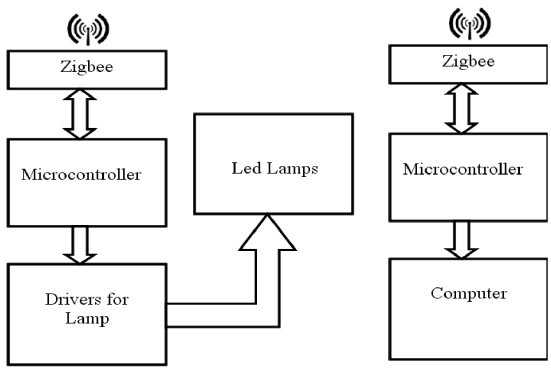

Fig 3.Block Diagram of Tunnel Light Lamp Post

Microcontroller is the core of the proposed system. It is supplied with the time to generate PWM (Phase Width Modulation) to drive high power LEDs and read/write data to memory. There is a serial interface between module and operator's computer which helps to configure the node. Zigbee module is used to

communicate between local and lamp nodes installed inside the tunnel. The watch mode of microcontroller is activated and every node is decided lonely to turn on/off lamp. For this case, we just update the time register of microcontroller system is designed in such a way that if link is broken the node would work with old data but still working.

Local node gathers information of lamp nodes and it should be fast. So, Controller is used as CU (Control Unit) of this section. Flash memories are used to save the status information of nodes (such as time on/off, the main clock, priority of nodes, so on).

There is a serial interface for Connection between user and controller which can transfer node information and check the lamps whether they are on or off. Two ways is considered for communication between control terminal and local nodes:

VI. RESULT

A prototype for smart solution for tunnel light system is discussed. In particular, the proposed system is intelligent, which lamp nodes can work with or without local node or control terminal. It means lamp nodes can work together or lonely. We tested our board at one whole day with time switch on/off control and we find out this result in TABLE II:

Sr No	Timing /Traffic	Consumption Without Control	Bill in Rs	Consumption With control	Bill in Rs
1.	Peak	28800KW	230400	14400KW	230400
2.	Moderate	14400KW	115200	7200KW	57600
3.	Minimum	14400KW	115200	3600KW	28800
	Total	57600KW	460800	25200KW	316800

TableII :Energy and Amount Saving over month

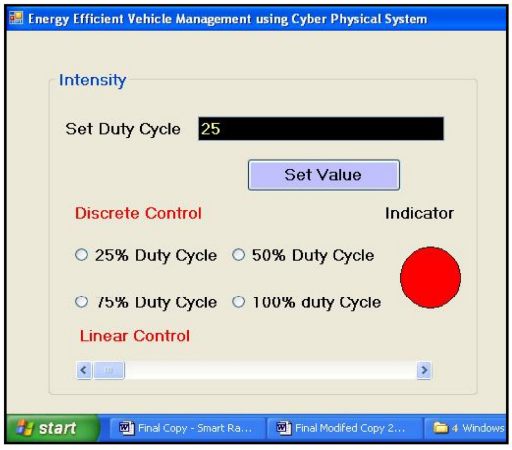

Fig.4. GUI for the proposed System

CONCLUSION

Tunnel-lights take up to 40% of a city's energy budget and they are a large consumer of energy for cities. The proposed system can use in streets, tunnels, roads, highways. Also because of flexible software the system can support lighting of parks and industrial warehouse.

This system have some advantage: control of each lighting lamp, determine the exact location of Cable rupture, Increase efficiency and lamp life, Reduction of environmental pollution in cities, Systematic maintenance of lighting facilities and so on.

Hence it is smart solution for tunnel light control.

REFERENCES

[1] Atıcı, C.; Ozcelebi, T.; Lukkien, J.J.; , "Exploring user-centered intelligent road lighting design: a road map and future research directions," Consumer Electronics, IEEE Transactions on, vol.57, no.2, pp.788-793, May 2011

[2] Wu Yue; Shi Changhong; Zhang Xianghong; Yang Wei; , "Design of new intelligent street light control system," Control and Automation (ICCA), 2010 8th IEEE International Conference on , vol., no., pp.1423-1427, 9-11 June 2010

[3] Wu Yue; Shi Changhong; Yang Wei; , "Study of acquisition streetlights background signal by multi-sensor array," Control Automation and Systems (ICCAS), 2010 International Conference on , vol., no., pp.1000-1003, 27-30 Oct. 2010

[4] "E-street" project deliverables available online: http://www.e- streetlight.com/

[5] Yun-gui Zhang; Li-na Zhao; Li-na Wang; Sheng-yong Zhang; , "A Web-Based Management System for Urban Road Lighting," Web Information Systems and Mining (WISM), 2010 International Conference on , vol.2, no., pp.279-282, 23-24 Oct. 2010

[6] Denardin, G.W.; Barriquello, C.H.; Pinto, R.A.; Silva, M.F.; Campos, A.; do Prado, R.N.; , "An Intelligent System for Street Lighting Control and Measurement," Industry Applications Society Annual Meeting, 2009. IAS 2009. IEEE , vol., no., pp.1-5, 4-8 Oct. 2009

[7] Mendalka, M.; Gadaj, M.; Kulas, L.; Nyka, K.; , "WSN for intelligent street lighting system," Information Technology (ICIT), 2010 2nd International Conference on , vol., no., pp.99-100, 28-30 June 2010

[8] De Dominicis, C.M.; Flammini, A.; Sisinni, E.; Fasanotti, L.; Floreani, F.; , "On the development of a wireless self localizing streetlight monitoring system," Sensors Applications Symposium (SAS), 2011 IEEE , vol., no., pp.233-238, 22-24 Feb. 2011

[9] Andrei, H.; Cepisca, C.; Dogaru-Ulieru, V.; Ivanovici, T.; Stancu, L.; Andrei, P.C.; , "Measurement analysis of an advanced control system for reducing the energy consumption of public street lighting systems," PowerTech, 2009 IEEE Bucharest , vol., no., pp.1-6, June 28 2009-July 2 2009

[10] Lee, J.D.; Nam, K.Y.; Jeong, S.H.; Choi, S.B.; Ryoo, H.S.; Kim, D.K.; , "Development of Zigbee based Street Light Control System," Power Systems Conference and Exposition, 2006. PSCE '06. 2006 IEEE PES , vol., no., pp.2236-2240, Oct. 29 2006- Nov. 1 2006

[11] Viraktamath, S.V.; Attimarad, G.V.; , "Power saving mechanism for street lights using wireless communication," Signal Processing, Communication, Computing and Networking Technologies (ICSCCN), 2011 International Conference on , vol., no., pp.282-285, 21-22 July 2011

[12] F. Pearce, "RMS and CMS for Road Lighting – a Technology Overview", Lighting Journal, vol. 74, no. 2, pp. 38-42, 2009

[13] ZigBee Specification (2006). ZigBee Document 053474r17.ZigBeeAlliance. Available:http://www.zigbee.org

[14] Kim, "Development of Zigbee based Street Light Control System", in Proc. of Power Systems Conference and Exposition PSCE '06 2006 IEEE PES, pp. 2236 – 2240, 29 Oct. – 01 Nov., 2006

[15] M. Mendalka, M. Gadaj, L. Kulas and K. Nyka, "WSN for intelligent street lighting system", in Proc. of the 2nd International Conference on Information Technology, ICIT 2010, Gdansk, Poland, 28 – 30 June, 2010

[16] M.A.D. Costa, G.H. Costa, A.S. dos Santos, L. Schuch and J.R. Pinheiro, "A high efficiency autonomous street lighting system based on solar energy and LEDs", in Proc. of Power Electronics Conference, 2009, pp. 265 – 273, 27 Sept. – 01 Oct. 2009

[17] W. Yue, S. Changhong, Z. Xianghong and Y. Wei, "Design of New Intelligent Street Light Control System", in Proc. of 8th IEEE International Conference on Control and Automation (ICCA), pp. 1423 – 1427, 9 – 11 June, 2010

[18] M. S. Shur and A. Zukaukas, "Solid-State Lighting: Toward Superior Illumination", Proceedings of IEEE, Vol. 93, No. 10, pp. 1691 – 1703, October 2005.

★★★