International Journal of Advanced Computational Engineering and Networking, ISSN(p): 2320-2106, ISSN(e): 2321-2063
Volume-6, Issue-6, Jun.-2018, http://iraj.in

PRECISION AGRICULTURE USING WIRELESS SENSOR NETWORK

[1]MANISH KUMAR DHOLU, [2]K. A. GHODINDE

[1]Student, College of Engineering Pune, Pune-05
[2]Assistant Professor, College of Engineering Pune, Pune-05
E-mail: [1]dholumc16.instru@coep.ac.in, [2]ssk.instru@coep.ac.in

Abstrac - Agriculture has been primary source of income for most of the humans in developing country. But due to traditional farming practices the productivity has been very limited. Farmers often get low price due to non uniformity in crops from the same field. To overcome this problem one has to adopt smart agriculture/farming. Smart agriculture means to utilize latest technology to increase productivity and decrease cost. Precision agriculture is one of the models which can utilize wireless communications benefits to produce uniform and efficient crop. The idea is to sense the data from agricultural field & control action to be done locally. Further that data can be sent to central station so that user can access that data to take further decision. The Parameters from Green house field which are likely to be measured are soil moisture & temperature, Air Humidity & Temperature, Light intensity. This paper proposed concept includes the development of the communication nodes which are capable of sensing soil moisture, humidity and temperature and to provide actuation signal to control aforesaid parameter. This sensor node is capable of creating control signal locally based on the measured parameter and also sending sense data to the central station. There are total three control signal a) for irrigation valve (soil moisture control) b) for Temperature control mechanism (temperature control) c) for fogger (humidity control). This Sensor node will communicate with central node via Zigbee technology. With Green house scenario in mind as Xbee provides up to 70m coverage area, low power, low data rate, it is sufficient our need. As this is very slow process project demands relatively very low data rate. So Xbee has feature of routing as well that will help in increasing total network coverage.

Keywords - Precision Agriculture, IOT, Wireless Sensor Network, Zigbee

I. INTRODUCTION

Agriculture is a main source of income for every occupant in India and it is true for all developing countries. Demand for agricultural product is increasing day by day due to population explosion and on the other side due to urbanization agricultural land is decreasing. Food and Agriculture Organization says in its one of the report named ‘How to feed the world 2050” that to overcome ever increasing demand, the agriculture production has to be increased 70% by the year 2050. It is estimated by United Nation (UN) that the world population will be 9.7 billion humans by 2050. There will be huge spike in food demand that can be anywhere between 50% and 80% because of above reason. This will lead the agricultural market like never seen before. Now to feed this much population global agriculture production has to be increased. There are two possible ways to increase overall agricultural production one is to increase the agricultural Land or by increasing the productivity. But in current scenario increasing agricultural land seems to be almost impossible task due to urbanization. Lots of agricultural land from the rural area especially which are near the urban areas are being converted in to NA (Non agricultural) land which further result in building urban infrastructure. So point is ultimately there is a decrease in agricultural land. So we only left with second option of increasing Productivity. There are certain ways of increasing productivity. We have technology in place to help farmers in increasing productivity.

Agriculture is industry which is not exposed to technology that much; one reason behind this is the economical condition of most of the farmer. Small farmer having few acres of land are always reluctant to embarrass the technology as we now that technology always comes with cost.

One of the prime factors in increasing productivity is to utilize the resources very economically. There comes the concept of the precision agriculture. By definition precision agriculture is a method of farm management that utilizes the Information communication technology to ensure the real-time status of the crop health. Precision agriculture means to provide right amount of resources at right time. One of the major problems in traditional farming is that irrigation is normally a time based process. Farmer tends to irrigate crop after certain no. of days. Here is one of the problem, Land may not requires water so early in rainy season or may requires frequent irrigation in summer. So ultimately its soil moisture level required for that particular crop matters the most. So if one can sense the soil moisture and then based on that reading takes the decision of irrigation. Now if we think about green house scenario then we got two more parameter i.e. Air Temperature and humidity. These parameters plays major role in the growth of crop.

One has to ensure that the atmospheric temperature and humidity inside the house is under certain limit. So to control any parameter we have to measure it. There comes the sensor node in to the picture. Sensor node is be combination of sensors which are capable

of sensing agricultural data and the electronic circuit to help the conditioning and the transfer of data.

II. LITERATURE SURVEY

The Paper [1] proposed the system with wireless sensor network. It also explores the potential application of sensor network in the domain of agriculture specifically in India. This paper aims at the sugar cane crop with sensing of multiple parameters that includes soil temperature and humidity. It also compares all the existing technology available for wireless sensor network. This paper is simply a review of all available technology in WSN for researcher to work on.

The design and development of the sensor node and connecting them to create network with the Internet of Thing is discussed in paper [2]. This paper also suggests decision support system [DSS] containing various agricultural node each of them containing different agricultural sensor. It also suggests the potential of IOT in Agricultural industries.

A study of short range wireless communications protocol i.e. Bluetooth, UWB, Zigbee and Wi-Fi is presented in paper [3] by comparing each other. Each protocol mention in this paper is based on IEEE 802 standard. Author presented all the differences between all this protocol that includes frequency band, normal range, nominal Tx power, channel bandwidth, maximum number of nodes can be networked in the network, encryption etc. Though this paper doesn't draw any conclusion suggesting superiority because it ultimately depends on the application one is targeting.
This paper [4] presents a frame work for automated agriculture using WSN (wireless sensor network) having energy efficiency as one of their target. Paper also depicts the available wireless sensor technology that can be feasible when we talk about the application like agriculture which normally have harsh environment in terms of temperature and the sensor node is kept under direct sunlight. It also compares the broad overview of available technology like Wi-Fi, Zigbee and Bluetooth.

The paper [5] presents the agriculture monitoring system having features like remote controlled using GPS monitoring and automatic irrigation using data which is sensed by the field sensor. In this paper the PIC 16F877A microcontroller is used and the sensor nodes are connected with controller using RS232. For intruder detection this paper suggests the occupancy sensor (PIR) which is used to alert the user in case of any animal or human intruder in the field.

The wireless sensor network has been developed in this paper [6]. The basic concept is to sense all the agricultural parameter at the sensor node level and send that data to central station. Sensor data from all these data points are available at central station. Soil moisture and humidity & Light intensity are the likely parameters which are sense in this WSN system.

Internet of Thing (IOT) application in the field of agriculture is analyzed in the paper [7]. This paper also discusses possible technology at sensing layer and network layer. It also discusses various applications that can be involved in agriculture field. What are the areas where one can implement IOT is mentioned in the paper. This paper introduces IOT concept in the domain of Agriculture.

The three layer architecture for WSN (wireless sensor network) is proposed in the paper [8]. This paper presents the 3 layer i.e. front end layer, gateway layer and back end layer in which front end layer consists of sensor and actuators circuitry while Back end layer include data analytics, data storage and data visualization. This paper shows the ability of architecture to sense and visualize rain volume and wind speed & direction.

III. PROPOSED WORK

The concept of proposed wireless sensor network for precision agriculture is shown in Fig.1 that consists of three layers of node i.e. coordinator node, router node and endive or end point node. Every network needs one coordinator node because that is the node where data sensed by each node is available. It is normally with central station. End device or end point nodes are the one which are located in the field. Physically field sensors are connected with this end node. Based on the sampling rate, end point node can be in sleep mode. Router and coordinator can never be in sleep mode. Router node is the one which may have sensors connected with it. Router node helps the end point node or other router node to route their data to the coordinator node. The basic building block for the coordinator node and router node is expressed in Fig. 2. All the sensors are connected at router node or End device node.

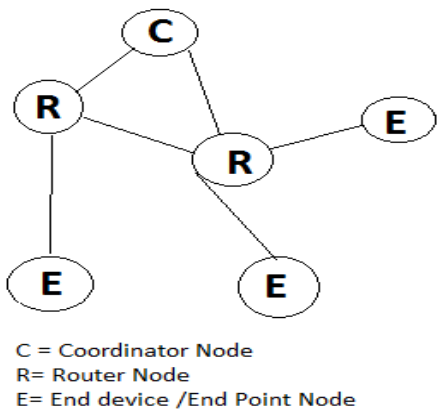

Fig.1

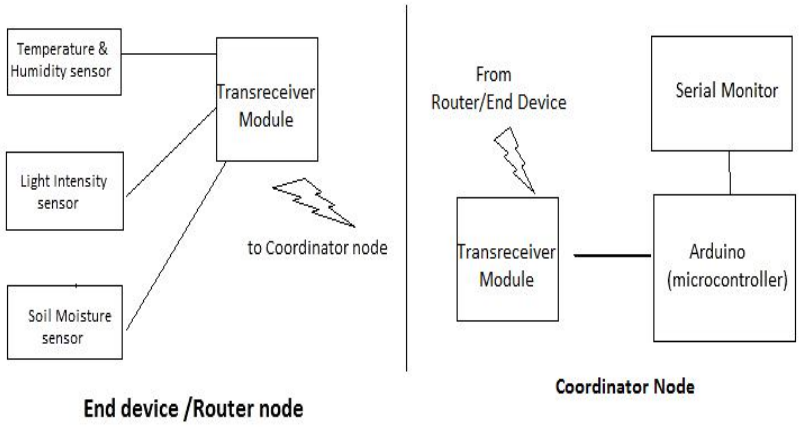

Fig. 2

As seen in Fig.2 transreceiver module of coordinator node is connected with Arduino using UART communication i.e. TX and Rx pin of Arduino. In this project the wireless communication between end device and coordinator is done using Xbee wireless communication technology.

Soil moisture, air humidity, air temperature and light intensity plays pivotal role in the overall growth of the plant in greenhouse environment. In order to control above mention parameter, it is measured using different types of sensors mention in the Table 1. For Air Temperature and Humidity DHT11 sensor is used. It is basically a combined unit for sensing temperature and humidity. Humidity and temperature at the plant leaves plays important role in photosynthesis process. Amount of heat (Temperature) and water molecules (relative humidity) requirement for different crop will be different. That can be done by changing the set point of the temperature and humidity. Idea proposed to control temperature and humidity to activate the valve having fogger in the line so the water droplet in the atmosphere will cater the humidity requirements and the fresh air flow from surroundings will help in controlling temp in Greenhouse environment. During photosynthesis process the plant also needs the light and that too if we can provides right amount of light then the process can be optimize.LDR is a normal resister which changes the resistance based on the light intensity. Soil moisture is one of the key parameter for the overall growth of the plant as plant gets water from soil through its roots. Soil moisture is measured by electrodes. The resistance between at two electrodes gives us the amount of humidity.

Sensors	Type
Air Temperature	DHT11
Air Humidity	DHT11
Soil Moisture	YL-69 Electrode
Light Intensity	LDR

Table 1

Xbee S2 is a transreceiver module used in the proposed work. It is based upon IEEE 802.15.4 Zigbee protocol. It works on 3.3v power supply has range of 40 meters in indoor and 120 meters of outdoor range on top of that it also has mesh routing capability. It has 11 Digital I/O pins and 4 Analog inputs pin as well. Analog input pin of this module can accept up to 1.3v only. Our signal from sensor has to scale according to module. And It has inbuilt 10 bit ADC which converts 0 to 1.3 v into 0 to 3FF (1023 in decimal) count. Same Xbee s2 module can work as a coordinator, router/end device. One has to pre configured it according to the requirements. Configuration is done for this proposed work using XCTU software.

IV. RESULTS AND OBSERVATIONS

The data frame received at the coordinator node from end device/router is snipped in Fig 3. It is a data frame which is obtained from coordinator Xbee transreceiver module. An Arduino is used to get this data frame. Serial communication between Arduino and wireless communication module Xbee s2 is established at coordinator node.

```
7E, 0, 16, 92, 0, 13, A2, 0, 41,
5, 3, D0, 17, 32, 1, 1, 0, 10,
3, 0, 10, 2, 2B, 1, BB, 48,
```

Fig.3

The Fig.3 shows the actual data frame when two of 4 analog input pin of Xbee module was enabled. If we further examine the data frame then 7E indicates the beginning of data frame. Next two byte 0 and 16 indicates the data frame length from start byte to checksum. The data frame in Fig. 3 is received from Xbee module having 64 bit address which starts from 5th byte of the frame. The last byte of the frame is

checksum byte which helps in detecting the error in communication. An Arduino Uno prototyping board is used to acquire required information from the data frame mentioned in the Fig.3. The final output in terms of the sensor readings for Air Temperature & humidity, Soil moisture and light intensity is obtained at serial monitor. Arduino IDE serial monitor is shown in Fig.4. To convert change in resistance into voltage variation an interfacing circuit is used and that dc voltage is fed at analog input of end device/router.

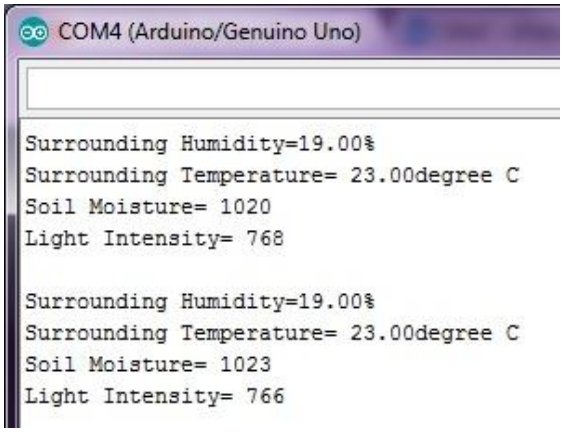

Fig.4

CONCLUSION

In the paper we have proposed the network consists of sensors and wireless communication modules capable of collecting agricultural field data and sending it to the central station. We have built the end point node and the coordinator node using the trans receiver module and some electronics circuits for matching the voltage level. Each node is capable of driving digital output using DI/O pin from transreceiver module. Most importantly Xbee has routing capability which helps in covering large area in agricultural field.

REFERENCES

[1] Anjum Awasthi, S.R.N. Reddy, "Monitoring for Precision Agriculture using Wireless Sensor Network – A Review", Global Journal of Computer Science and Technology (E) Volume XIII Year 2013.

[2] Junyan Ma, Xingshe Zhou, Shining Li, Zhigang Li, "Coonecting Agriculture to the Internetof things through sensor Networks", 2011 IEEE International conferences on Internet of Things, and Cyber, Physical and Social computing

[3] Jin-Shyan Lee, Yu-Wei Su, Chung-Chou Shen, " Comparitive Study of Wireless Protocols: Bluetooth, UWB, Zigbee and Wi-fi", The 33rd Annual conference of IEEE Industrial Electronics society(IECON).

[4] R. Math, N. V. Dharwadkar, "A wireless Sensor Network Based Low Cost and Energy Efficient Frame Work for precision Agriculture", 2017 International Conference on Nascent Technologies in the Engineering Field.

[5] Dr. N. Suma, S. R. Samson, S. Saranya, G. Shanmugapriya, R. Subhashri " IOT Based Smart Agriculture Monitoring System", International Journal on Recent and Innovation Trends in computing and communication.

[6] G. Sahitya, N. Balaji, C.D. Naidu, S. Abhinaya, "Designing a Wireless Sensor Network for Precision Agriculture using Zigbee", 2017 IEEE 7th International advanc computing conference.

[7] O.P. Uma Maheshwari, M.Savitha, "A study on Internet of Things in Agriculture", International Journal of Innovative Research in Computer and Communication Engineering.

[8] Khattab, A. Abdelgawad, K. Yelmarthi, "Design and Implementation of a cloud based IOT scheme for precision Agriculture", International conference on Microelectronics 2016

★★★