PROTECTIVE HEADGEAR USING SMARTPHONE CONNECTIVITY

[1]PATIL PRITAM, [2]KEVIN NESAMANI, [3]ANNIESH J, [4]ANDHAVARAPU SIVA, [5]D. RAMKIRAN

[1,2,3,4,5]Post Graduate Scholar, M.Tech Automotive Electronics, Vel Tech University, Chennai
E-mail: [1]pritamp46@gmail.com, [2]kennith.n@gmail.com, [3]anniesh4u@gmail.com, [4]siva.andh@gmail.com, [5]ramnile@gmail.com

Abstract— Bike accidents are indubitably the most frequent & the main cause of injuries & sometimes death on roads. The reasons being extremely dense traffic on roads, over speeding, drunk driving, distraction to the rider. As we know that motorcycles doesn't provide much protection to the rider in case of accident, which inspires us to build a passive safety system i.e. a smart helmet, which minimizes the chances of accident. Helmet provides the first stage of protection to the rider, but most of the riders violate the traffic rules laid by the government by avoiding the use of helmet. This system ensures that the rider is wearing a helmet before he starts the bike. Also, the additional features like alcohol detection to ensure that the rider is not under the influence of alcohol. The retention system is also being monitored. The bike won't start if the retention system is not locked properly. So, the bike starts only after the rider puts on the helmet, locks the retention system and is having a non-alcoholic breath. The microphone & speaker arrangement in the helmet which has a wireless connection with the Smartphone will help the rider to navigate & attend/ reject calls without getting his hands off the handle. In addition to this, if it senses that there is any accident, it will intimate the nearest ambulance.

Index Terms— Accelerometer, Alcohol Detection,Bike Accidents, Helmet, Ignition control.

I. INTRODUCTION

The alarming increase in rate of deaths inspires us to build a safety system for motorcycle riders, which could help to decrease the number of casualties/deaths in road accidents to a great extent. The major reasons behind bike accidents are: Lack of traffic sense, DUI (alcohol/drugs), distraction to drivers, avoiding safety gears etc. Government has laid down many rules & made it compulsory to wear helmet while driving, but majority of people avoid using helmet. Helmet helps reducing facial injuries by almost 70% & there is no such evidence of any neck injury because of helmet. Death rate of people riding two wheelers without helmet is 2.5 times of those who were wearing helmet [7].

II. LITERATURE SURVEY

India has the dubious honor of leading the world in road related accidents and deaths. Road accident is the most unwanted incident to happen to a bike rider, but happens quite often. According to WHO, every 25seconds, someone is killed in road accident. Out of those almost 30% are bike riders [8].
In India, there is a serious road accident every minute & 16 die on Indian roads every hour. Over 137,000 people were killed in road accidents in 2013 alone, which is much more than the total number of people killed in all our wars put together[9].

The accident count is neither constant nor decreasing, but it is increasing every year.

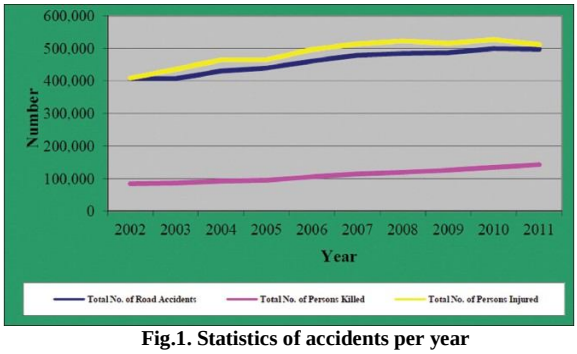

Fig.1. Statistics of accidents per year

III. PROPOSED SYSTEM

Considering above prescribed reasons for accidents, we have built a passive safety system i.e. a smart helmet, which communicates with the vehicle and a Smartphone (via a specific mobile app), which helps to minimize the chances of accident. Most of the riders violate the traffic rules laid by the government by avoiding the use of helmet. In this system, a tactile switch on the top ensures that the rider is wearing a helmet before he starts the bike. Also, the additional features like alcohol detection which uses a sensor placed near the mouth to ensure that the rider is not drunk. The retention system is also being monitored. The bike won't start if the retention system is not locked properly. So, the bike starts only after the rider puts on the helmet, locks the retention system and is having a non-alcoholic breath. When all these conditions are satisfied, the microcontroller in the helmet sends a signal via Bluetooth to the vehicle without which it won't start. The microphone & speaker arrangement in the helmet which has a wireless connection with the Smartphone will help the rider to navigate & attend/ reject calls without getting

his hands off the handle. In addition to this, the accelerometer embedded in the helmet senses the sudden deceleration if there is any accident, which is further connected to the GSM module i.e. the smart phone. An alarm will be turned on immediately after the accident takes place & if it is not turned off within 15 seconds, it will send a message to the friends/relatives & nearest ambulance with details of the location where accident took place. We have designed such a system, which eradicates almost all the possibilities of an accident taking place.

1. Helmet detection

Helmet detection system is to ensure that the rider is wearing a helmet before starting the bike. This is the first condition to be satisfied by the rider in order to start the bike. A tactile switch is used for this purpose. It is placed on the top of the inner shell of the helmet. When pressure is applied on the switch, it acts as a closed switch & it sends an electrical signal to the microcontroller, which is used to send further command to the ECU of the bike via Bluetooth [3].

Fig.2. Tactile Switch

2. Retention System

The retention system is being monitored & if it is not locked properly, the corresponding signal is sent to the microcontroller. It just simply detects the connection between tongue (male) & buckle (female) of the retention system of the helmet. Proper locking of the retention system is the second condition to be satisfied by the rider in order to start the bike. When the tongue of the retention system enters the buckle, it acts as a closed switch, otherwise open switch.

3. Alcohol Detection

To ensure that the rider is sober, a sensor is placed near the mouth vent of the helmet. The sensor used here is a MQ-3 gas sensor, which is capable of detecting ethanol concentration in air [1], [6]. The sensor consists of an Aurum electrode present between Alumina tubes (Al_2O_3) & Tin Dioxide (SnO_2). A coil & Aurum electrode acts as heater & heats up the assembly. When the coil is heated, SnO_2 will become a semiconductor, so there are more movable electrons i.e. it is ready to generate more current. When the electrode comes in contact with the alcohol molecules, ethanol burns into acetic acid & more current is produced. More the alcohol comes in contact with the sensor, more is the output current.

Fig.3. MQ-3 Sensor

If the rider is drunk, his breath will be alcoholic i.e. ethanol will be detected by the MQ-3 sensor when he breathes & corresponding signal will be sent to the microcontroller. Depending upon the level of concentration of ethanol in breath, the corresponding signal is sent to the microcontroller & if it exceeds the threshold value, it will send a signal to the vehicle via Bluetooth & the bike won't start.

4. Accelerometer

In case the bike rider meets an accident & the rider falls off the bike, then the accelerometer placed on the helmet observe sudden change in the acceleration & sends corresponding signal to the microcontroller. The accelerometer can detect three motions viz yaw, pitch, roll. It generates three analog outputs depending upon the detection of the corresponding motion. In case of abrupt change in acceleration it will suddenly change the output values & this condition will be considered by the microcontroller as an accident has taken place

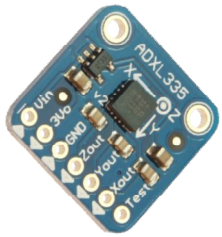

Fig.4. Accelerometer

On reception of a signal from accelerometer, the microcontroller sends a signal to the Smartphone via Wi-Fi which further sends a message signal to the nearest ambulance & friends/family which consist the location where the accident took place.

5. Bluetooth Mic & Speakers

The working of Bluetooth microphone & speaker is similar to the working of a Bluetooth headset. The microphone being placed near the mouth vent of the helmet, where the MQ-3 sensor is placed & the speakers near the ears.

Distraction to the riders is one of the most common reasons for accidents. This involves holding Smartphone in one hand for attending a call while riding a bike. Also, the rider gets distracted while using his phone for navigation as he continuously observes the screen of the Smartphone for further

details. Hence, loosing concentration & might lead to accident.

So we design such a system where the rider automatically gets an audio message about the call with caller information & using voice commands, he can decide whether to accept the call or reject it. It can also be used for navigation. The rider will get the instructions in form of audio signals. This helps the driver to focus on the road & reduce the chances of the bike meeting an accident.

6. Mobile Application

A mobile application is designed which is capable of performing following tasks.

First, whenever the rider wishes to use GPS navigation, he will simply set the destination by audio signal/typing it manually in the Smartphone. The rider need not continuously monitor the mobile screen for further assistance. The mobile application will make sure that the audio commands are being received by the rider through speakers.

Second, whenever the bike meets an accident, the accelerometer will generate a signal which will be sent to the microcontroller. As soon as the microcontroller receives the signal, an alarm will be turned on. If the alarm is not turned off within 15seconds, it sends a signal to the Smartphone via Wi-Fi & when the Smartphone receives this signal, it will send an emergency message signal to the predefined three emergency contacts & the nearest ambulance/police station. The main aim of the message is to intimate the ambulance/police & predefined emergency contacts about the accident with the current location of accident [2], [4], [5].

Third, whenever the rider recieves a call on the Smartphone, the mobile application automatically intimates the rider about the call. It will announce the name of the caller through the bluetooth speakers & the rider can receive/reject/silent the phone call by saying corrosponding audio command.

7. Ignition Control in Vehicle

A small system is embedded in series with the engine kill switch which is connected via Bluetooth to the microcontroller of the helmet. This small embedded system in series with engine kill switch decides whether the circuit will be complete or not. As specified earlier, the three basic conditions to be satisfied by the rider viz… the rider should wear the helmet, lock the retention system & must have a non-alcoholic breath. When these three conditions are satisfied, the microcontroller in the helmet intimates the microcontroller embedded in the bike near engine kill switch via Bluetooth & it acts as a closed switch. If any of the conditions is not satisfied, then the microcontroller won't allow the embedded system to complete the circuit as it will act as an open switch for ignition & the bike won't start.

IV. OVERALL SYSTEM

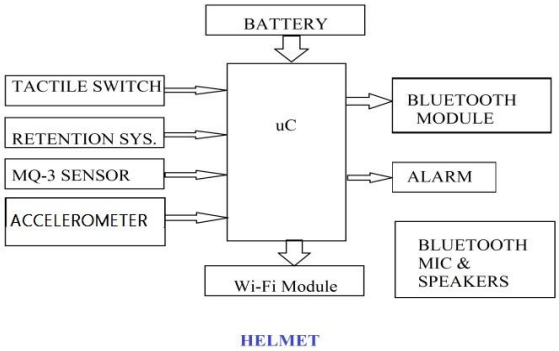

Fig.5. Overall system inside helmet

There are three basic conditions which must be fulfilled by the rider in order to start the bike i.e. the bike won't start until the rider wear the helmet, locks the retention system & has a non-alcoholic breath. The tactile switch ensures that the rider is wearing the helmet, the retention system is also being monitored. It is similar to a switching action. When the tongue (male) of the retention system enters the buckle (female) it gets locked & this action is similar to switch ON.

When the prescribed conditions are satisfied, the microcontroller sends a signal via Bluetooth module to the system embedded into the bike. This embedded system also has a Bluetooth receiver which receives a message from helmet & allows the signal to pass through & complete the circuit, hence, start the bike. Therefore, a rider has to satisfy those three conditions to start the bike.

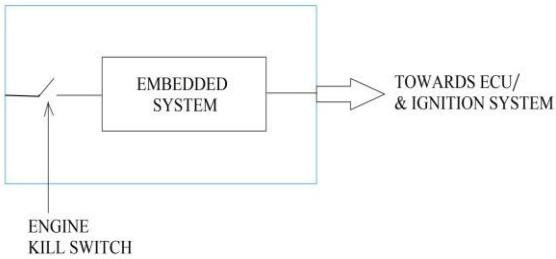

POSITION OF EMBEDDED SYSTEM IN MOTORCYCLE

Fig.6. Embedded system in bike

The system embedded in bike is placed in series with the Engine kill switch. Therefore it acts as a simple switch here. When it receives a Bluetooth signal from helmet after all conditions are satisfied, it acts as a closed switch, otherwise open switch. When it acts as closed switch the bike operates normally, but when it acts as an open switch, it won't allow the rider to start the bike.

If the rider meets an accident, then the accelerometer detects the abrupt change in the acceleration & sends the corresponding signal to the microcontroller. The microcontroller further sends a Wi-Fi signal to the

Smartphone & the designed mobile application detects the signal which further sends a message signal to the nearest ambulance/police station & three predefined numbers of friends/relatives along with the location of accident.

V. CIRCUIT DIAGRAM

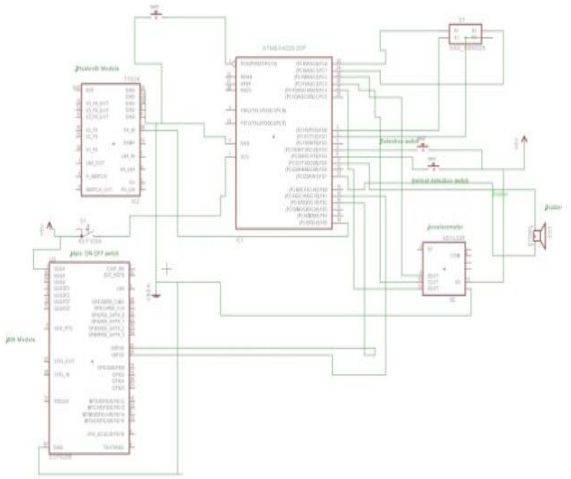

Fig.7. Simulation diagram

FUTURE SCOPE

- Visuals can be provided to the rider by a small screen in the helmet without obstructing the view.
- GPS can be implemented in bike to track down the vehicle in case of theft.
- Vents could be provided for air circulation inside helmet.

REFERENCES

[1] Pratiksha Bhuta, Karan Desai, Archita Keni, Vijayalakshmi Badre, ”Alcohol detection and vehicle controlling,” International Journal of Engineering Trends and Applications (IJETA) – Volume 2 Issue 2, Mar-Apr 2015.

[2] R. Prudhvi Raj, Ch. Sri Krishna Kanth, A. Bhargav Adityaand K. Bharath, “Smart-tec Helmet ,” Advance in Electronic and Electric Engineering. ISSN 2231-1297, Volume 4, Number 5 (2014), pp. 493-498

[3] Nitin Agarwal, Anshul Kumar Singh, Pushpendra Pratap Singh, Rajesh Sahani,” SMART HELMET,” International Research Journal of Engineering and Technology Volume: 02 Issue: 02 | May-2015 e-ISSN: 2395 -0056 p-ISSN: 2395-007

[4] Manjesh N, Sudarshan Raj,” Smart Helmet Using GSM &GPS Technology for Accident Detection and Reporting System,” International Journal of Electrical and Electronics Research Vol. 2, Issue 4, pp: (122-127), Month: October - December 2014 ISSN 2348-6988

[5] Kajal Thakre, Pranali Waskar, Pooja Sawant, Suchita Naik, Sumita Chandak, ” Smart Helmet ,” International Journal of Advanced Research in Computer Science and Software Engineering, Volume 5, Issue 2, February 2015 ISSN: 2277 128X

[6] Sudharsana Vijayan, Vineed T Govind Merin Mathews, Simna Surendran, Muhammed Sabah M E,” ALCOHOL DETECTION USING SMART HELMET SYSTEM,” International Journal of Emerging Technology in Computer Science & Electronics (IJETCSE) ISSN: 0976-1353 Volume 8 Issue 1 –APRIL 2014.

[7] Those Deadly Motorcycle Crashes URL: http://indiatoday.intoday.in/story/india-has-highest-rates-of-motorcycle-injuries/1/151522.html

[8] *WHO, ed. (2015).* "Global Status Report on Road Safety 2015" *(PDF) (official report). Geneva, Switzerland: World Health Organisation (WHO). pp. vii, 1–14, 75ff (countries), 264–271 (table A2), 316–332 (table A10).* ISBN 978 92 4 156506 6. *Retrieved 2016-01-27. Tables A2 & A10, data from 2013.*

[9] Unique idea to reduce crime rate, accidental deaths & traffic violations substantially URL: http://dynamicpedia.com/2015/12/11/unique-idea-to-reduce-the-crime-rate-substantially/

★★★