# OPTIMIZATION OF PARAMETERS FOR SPOT WELDING PROCESS BY EXPERIMENTATION

**[1]MAONGTEMSU PONGENER, [2]G.GOPINATH**

[1]M.Tech Student in ECET, Patelguda(v), Near BHEL, Hyderabad, Telangana, India
[2]Assistant Professor, in ECET, Patelguda(v), Near BHEL, Hyderabad, Telangana, India

**Abstract—**In this paper, number of experiments is conducted to join Aluminum alloy by spot welding process by varying the parameters welding current, weld time and voltage. The experimentation is carried out using a L9 orthogonal array with three factors with each factor having three levels. The weld characteristic optimized is weld strength. The welding current - 10Amps, 20Amps and 30Amps, Voltage – 220V, 230V and 240V, Weld Time – 4Secs, 5Secs, 6Secs are taken for experimentation. The optimization is carried out using Taguchi technique using Minitab Software. Static analysis is done to determine the stresses at the weld region. Modeling is done in Pro/Engineer and Analysis is done in Ansys.

## I. INTRODUCTION

Resistance spot welding (RSW) is a process in which contacting metal surfaces are joined by the heat obtained from resistance to electric current.

Work-pieces are held together under pressure exerted by electrodes. Typically the sheets are in the 0.5 to 3 mm (0.020 to 0.118 in) thickness range. The process uses two shaped copper alloy electrodes to concentrate welding current into a small "spot" and to simultaneously clamp the sheets together. Forcing a large current through the spot will melt the metal and form the weld. The attractive feature of spot welding is that a lot of energy can be delivered to the spot in a very short time (approximately 10–100 milliseconds). That permits the welding to occur without excessive heating of the remainder of the sheet.

The amount of heat (energy) delivered to the spot is determined by the resistance between the electrodes and the magnitude and duration of the current. The amount of energy is chosen to match the sheet's material properties, its thickness, and type of electrodes. Applying too little energy will not melt the metal or will make a poor weld. Applying too much energy will melt too much metal, eject molten material, and make a hole rather than a weld. Another feature of spot welding is that the energy delivered to the spot can be controlled to produce reliable welds.

Projection welding is a modification of spot welding. In this process, the weld is localized by means of raised sections, or projections, on one or both of the work pieces to be joined. Heat is concentrated at the projections, which permits the welding of heavier sections or the closer spacing of welds. The projections can also serve as a means of positioning the workpieces. Projection welding is often used to weld studs, nuts, and other screw machine parts to metal plate. It is also frequently used to join crossed wires and bars. This is another high-production process, and multiple projection welds can be arranged by suitable designing and jigging.

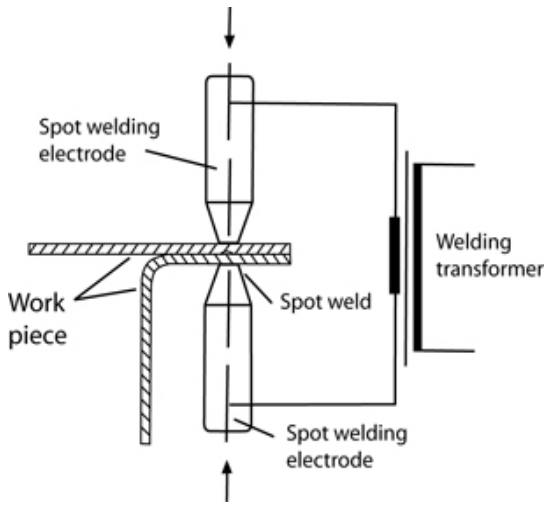


**Fig.1. Spot Welding**

## II. LITERATURE SURVEY

This experimental study By Manoj Raut [1], is based on an investigation of the effect and optimization of welding parameters on the tensile shear strength in the Resistance Spot Welding (RSW) process. The experimental studies were conducted under varying electrode forces, welding currents, and welding times. The settings of welding parameters were determined by using the Taguchi experimental design of L18 Orthogonal array method. The combination of the optimum welding parameters have determined by using the analysis of Signal-to-Noise (S/N) ratio. The confirmation test performed clearly shows that it is possible to increase the tensile shear strength of the joint by the combination of the suitable welding parameters. Hence, the experimental results confirmed the validity of the used Taguchi method for enhancing the welding performance and optimizing the welding parameters in resistance spot welding operations. In the paper by Mr. Nagsen D. Jadhav[2], investigated the development of weld zone in resistance spot welding (RSW) which focuses on weld nuggets and strength. In order to study the significance of process parameters i.e. namely

welding current, total cycle time and electrode force to get desired weld quality in resistance spot welding the weld quality based on weld nugget and weld strength. The experimentation is conducted for Stainless Steel (SS-204) plate thickness of 16 gauges. Whereas optimum welding parameters are investigated using the Taguchi method with L9 orthogonal array. A significant level of the welding parameters was further obtained by using analysis of variance (ANOVA).This study helps us to find out optimum value for three parameters for resistance spot welding for16 gauge. Optimum value of the response variables are obtained through the conformation test with 95 % confidence level. In the paper by S.A.Jadhav[3], this paper is directed towards the optimization process parameter of resistance spot welding process and simultaneously consider multiple quality characteristics tensile strength and nugget dia. using Multi Objective Taguchi Method. The experiment is conducted with varying Electrode force, current and weld time. The optimum welding parameter is obtain using signal to noise ratio and significant level is analyzed using analysis of variance. After considering all the parameters this study represent the systematic approach the effect of process parameter (Electrode force, current and weld time) on the tensile strength of resistance weld joint D-Grade as per IS 531 :1994.

## III. EXPERIMENTAL INVESTIGATION

Experimental investigation is done to determine the mechanical properties of Spot welding of pieces of Mild Steel by varying welding current, voltage and time. The property investigated is tensile strength of the welded pieces.

The test samples are 100 mm in length and 40 mm in width and 10 mm in thickness.The electrodes which are used are RWMA Class II Cu-Cr alloy with tips of Ø6 mm diameter. Welding current, weld time and voltage have been used as the control factors with each having three levels as shown in Table.

**Taguchi Orthogonal Array**

| JOB NO. | Current (Amps) | Voltage (V) | Welding Time (Secs) |
|---|---|---|---|
| 1 | 10 | 220 | 4 |
| 2 | 20 | 230 | 5 |
| 3 | 30 | 240 | 6 |

**Table I.**

The electrode tip diameter, squeeze time and hold time are maintained constant. Welding currents, weld times and voltages are identified by developing the weldability lobe for the welding gun. The experimentation is carried out using L9 orthogonal array in Taguchi Method with eight degrees of freedom as shown in Table.

| JOB NO. | Current (Amps) | Velocity (V) | Welding Time (Secs) |
|---|---|---|---|
| 1 | 10 | 220 | 4 |
| 2 | 10 | 230 | 5 |
| 3 | 10 | 240 | 6 |
| 4 | 20 | 220 | 5 |
| 5 | 20 | 230 | 6 |
| 6 | 20 | 240 | 4 |
| 7 | 30 | 220 | 6 |
| 8 | 30 | 230 | 4 |
| 9 | 30 | 240 | 5 |

**Table-II**

Orthogonal Array is a statistical method of defining parameters that converts test areas into factors and levels. Test design using orthogonal array creates an efficient and concise test with fewer test cases without compromising test coverage.

**Experimentation Photos**

**Tensile Test**
**Type of test – Mechanical Tensile**
**Machine Model – TUE-C-600**
**Machine Serial No – 2008/23**
Specimen Width – 20mm
Specimen Thickness – 6mm

| | UTS (MPa) |
|---|---|
| **Sample 1** | **64.193** |
| **Sample 2** | **65.633** |
| **Sample 3** | **114.452** |

**Table-III**

## IV. TAGUCHI PARAMETER DESIGN FOR SPOT WELDING PROCESS

In order to identify the process parameters affecting the selected machine quality characteristics of welding, the following process parameters are selected for the present work: Current (A), Voltage (B) and Welding Time (Secs). The selection of parameters of interest and their ranges is based on literature experiments conducted.

**Selection of Orthogonal Array**

The process parameters and their values are given in table. It was also decided to study the three – factor interaction effects of process parameters on the selected characteristics while welding Aluminum alloy. These interactions were considered between Current x Voltage (AxB), Voltage x Welding Time (BxC), Current x Welding Time (AxC)

| Factors | process parameters | level1 | level2 | level3 |
|---|---|---|---|---|
| **a** | **current (amps)** | **10** | **20** | **30** |
| **b** | **voltage (v)** | **220** | **230** | **240** |
| **c** | **welding time (secs)** | **4** | **5** | **6** |

**Table-IV**

**Results:**

Using randomization technique, specimens were machined and Tensile Strength was measured. The experimental data for the cutting forces have been reported in Tables. Tensile Strength 'larger the better' type of machining quality characteristics, the S/N ratio for this type of response was and is given below:

$$\text{S/N ratio} = -10\log\left[\frac{1}{n}(y_1^2 + y_2^2 + .... + y_n^2)\right] \quad \ldots (1)$$

Where $y_1, y_2, \ldots, y_n$ are the responses of the machining characteristics for each parameter at different levels.

**Observation**

| JOB NO. | Current (Amps) | Velocity (V) | Welding Time (Secs) | Tensile Strength ($N/mm^2$) |
|---|---|---|---|---|
| 1 | 10 | 220 | 4 | 64.193 |
| 2 | 10 | 230 | 5 | 65.633 |
| 3 | 10 | 240 | 6 | 114.452 |
| 4 | 20 | 220 | 5 | 116.56 |
| 5 | 20 | 230 | 6 | 119.1 |
| 6 | 20 | 240 | 4 | 65.589 |
| 7 | 30 | 220 | 6 | 117.2 |
| 8 | 30 | 230 | 4 | 115.3 |
| 9 | 30 | 240 | 5 | 114.57 |

**Table-V**

**Results**

Taguchi method stresses the importance of studying the response variation using the signal–to noise (S/N) ratio, resulting in minimization of quality characteristic variation due to uncontrollable parameter. The tensile strength is considered as the quality characteristic with the concept of "the larger-the-better". The S/N ratio for the larger-the-better is:

**$S/N = -10 * \log(\Sigma(Y^2)/n))$ (2)**

Where n is the number of measurements in a trial/row, in this case, n=1 and y is the measured value in a run/row. The S/N ratio values are calculated by taking into consideration above Eqn. with the help of software Minitab 17.

The material removal rate measured from the experiments and their corresponding S/N ratio values are listed in Table

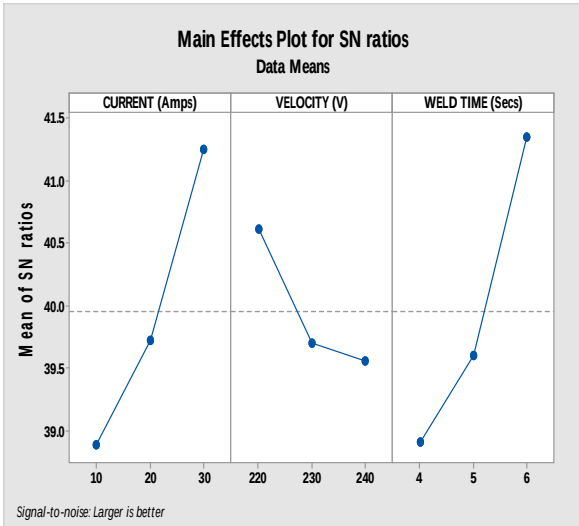


**Analysis and Discussion**

Regardless of the category of the performance characteristics, a greater S/N value corresponds to a better performance. Therefore, the optimal level of the machining parameters is the level with the greatest value.

**Current :-** The effect of parameter current on the tensile strength is shown above figure for S/N ratio. Its effect is increasing with increase in current. So the optimum current is 30Amps.

**Voltage :-** The effect of parameter velocity on the tensile strength is shown above figure for S/N ratio. Its effect is decreasing with increase in velocity. So the optimum velocity is 220V.

**Weld Time :-** The effect of parameter weld time on the tensile strength is shown above figure for S/N ratio. Its effect is increasing with increase in weld time. So the optimum weld time is 6Secs.

**Structural analysis Load at yield – 3.93kn**

**Deformation**

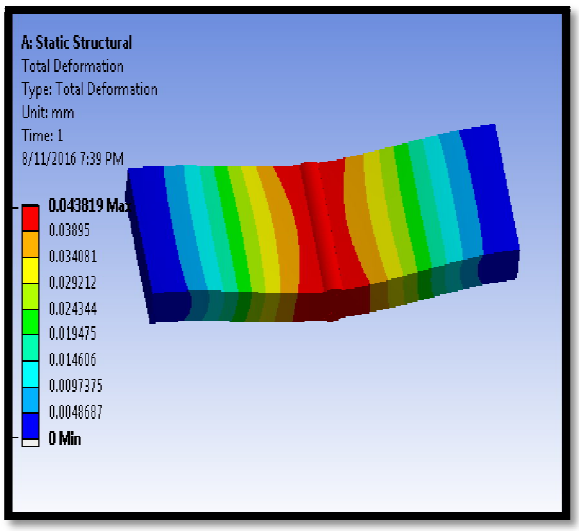


**Strain**

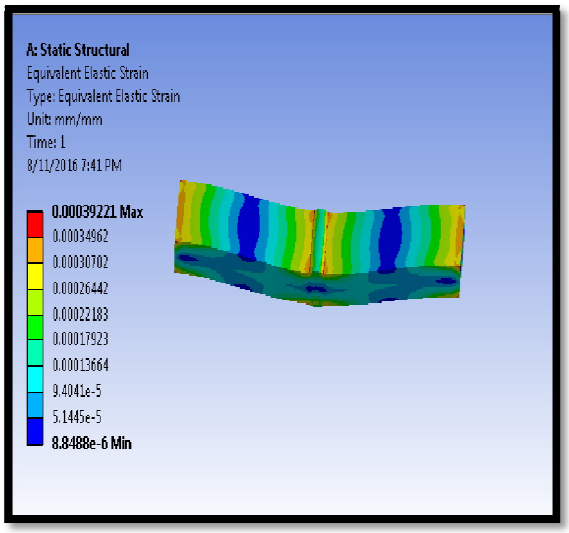


**Stress**

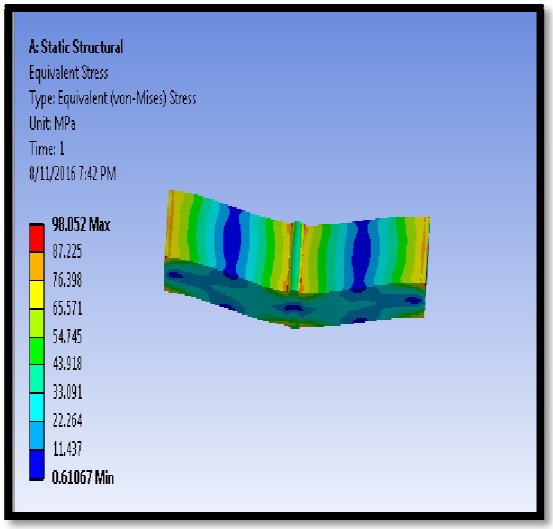


## CONCLUSION

The strength of Aluminum alloy is 310MPa. By observing the tensile test results, the tensile strength is increasing by increase of current, and weld time but decreasing by increase of voltage.

By observing the Taguchi method the following conclusions can be made:

To get high tensile strength, the optimal parameters are current – 30amps, Voltage – 220V and Welding Time – 6secs. Structural analysis is done at different loads. By observing the result, the stress values are less than the respective yield stress value of Aluminum alloy at both loads. The tensile strength values obtained from experimental are less than that of analytical stress values at respective loads.

## REFERENCE

[1] Optimization of spot welding process Parameters for maximum tensile Strength By Manoj Raut, and Vishal Achwal, ISSN 2278 – 0149 Vol. 3, No. 4, October 2014 IJMERR.

[2] Parametric Optimization of Spot Welding metal by Taguchi Approach By Mr. Nagsen D. Jadhav, Mr. Rahul A. Patil, Mr. Rajshekhar R. Patil, 2015 IJEDR | Volume 3, Issue 4 | ISSN: 2321-9939

[3] A Review Paper On Optimization Of Process Parameter Of Spot Welding By Multi Objective Taguchi By S.A.Jadhav, Dr. M.A.Venkatesh, International Research Journal of Engineering and Technology (IRJET) e-ISSN: 2395 -0056 Volume: 03 Issue: 05 | May-2016

[4] Application of taguchi method for Resistance spot welding of galvanized steel By A. G. Thakur, T. E. Rao, M. S. Mukhedkar and V. M. Nandedkar, VOL. 5, NO. 11, NOVEMBER 2010 ISSN 1819-6608 ARPN Journal of Engineering and Applied Sciences

[5] Optimization of Process Parameters for Resistance Spot Welding Process of HR E-34 Using Response Surface Method – A Review By B. S. Gawai, Dr. C. M. Sedani, International Journal of Science and Research (IJSR) ISSN (Online): 2319-7064 Index Copernicus Value (2013): 6.14 | Impact Factor (2014): 5.611

[6] Optimization of resistance Spot welding parameters using Taguchi method By A. K. PANDEY, M. I. KHAN, K. M. MOEED, International Journal of Engineering Science and Technology (IJEST)

[7] Process Parameter Optimization in Resistance Spot Welding of Dissimilar Thickness Materials By Pradeep M., N. S. Mahesh, Raja Hussain, International Journal of Mechanical, Aerospace, Industrial, Mechatronic and Manufacturing Engineering Vol:8, No:1, 2014

[8] Spot Welding Parameter Optimization To Improve Weld Characteristics For Dissimilar Metals By Aravinthan Arumugam, MohdAmizi Nor, International Journal of Scientific & Technology Research, Volume 4, Issue 01, January 2015

[9] Chetan R Patel and Dhaval A Patel (2012), "Effect of Process Parameters on the Strength of Aluminium Alloy A5052 Sheets Joint Welded by Resistance Spot Welding with Cover Plates", August.

[10] Khanna O P (2008), A Text Book of Welding Technology, pp. 184-198, Dhanpat Rai Publication.

★★★