DESIGN OF SMART FARM ENVIRONMENT CONTROL SYSTEM BASED ON PUBLIC DATA CONNECTION

[1]SUNGWOOK YOON, [2]HYENKI KIM

[1,2]Dept. Multimedia Engineering,AndongNational University
E-mail: [1]uvgotmail@nate.com, [2]hkkim@anu.ac.kr

Abstract- This study has collected sensor data by subminiature computer and public data regarding the external environment related to sensor data in configuring sensor network based IoT to decide complex data regarding system management, and proposed improved data collection method by connecting external and interior environmental elements.As a prototype, based on data collection if interior environment data in plant factory or house cultivation facility, and public data collection such as exterior weather data which affects facility, the complex environment is processed through subminiature computer and report to user so that it can configure economic and efficient network system.

Index Terms- Public data, Internet of Things, Smart Farm, Chatbot

I. INTRODUCTION

Since the 2010s, active dissemination of open source hard ware companies led to standardization of remote-control platform and improved its usability[1]. Also,the interactive application IoT control service in open API from has combined with open source hardware and brought about integral result in actualizing actual IoT. Such combination crated user-interface as IoT platform and is forming user-experience through interactive between object and user. Actually, the IoT sensor network design enables measurement and control of sensor data, collects complex sensor data and use as accumulation of data[2]. For example, connection between hardware platform of plant factory and interactive platform of sensor network enables user to form new market and improve experiential element of consumer.

This thesis discussed the service implementation conceptbased on conceptual design of sensor network. Also, it implemented communication control prototype of singe board computer and designed sensor node to study the sensor data collection and public data collection measures. Finally, it designed control prototype with users through interactive application control API of Raspberry Pi on actual IoT platform.

II. SYSTEM CONFIGURATION

IoT configuration is installed to server of single board computer, the open source hardware, and the sensor configures sensor nodes such as Arduino through GPIO or modbus.

A. *Single board computer and sensor node bus configuration*

Raspberry Pi, the typical single board computer used in this study is a system mounting Raspberry Pi from Debian Linux series as OS. It enables python program and if using the Raspberry pi cross complier, C/C++ program is also available [3].

The proposed system connects Arduino and Raspberry Pi through RS232c. The system use Arduino by connecting node bus and connects Raspberry Pi with RS232c serial. If extension system is connected to basic board of Arduino, it also provides communication function such as Zigbee, Bluetooth, Ethernet.

The proposed system use analogue, digital input and output to accommodate various types of sensor communication method.

B. *Configuration of Smart Farm*

Smart farm is known as plant factory system which controls temperature, humidity, CO2 concentration,culture medium of the facility cultivating vegetables of functional plants artificially and cultivate plants automatically. This study designed the system focusing on single board computer. It requires complex automation and control such as measurement, control technique, database and artificial intelligence technique, data communication, integrated software system and sensor technique.

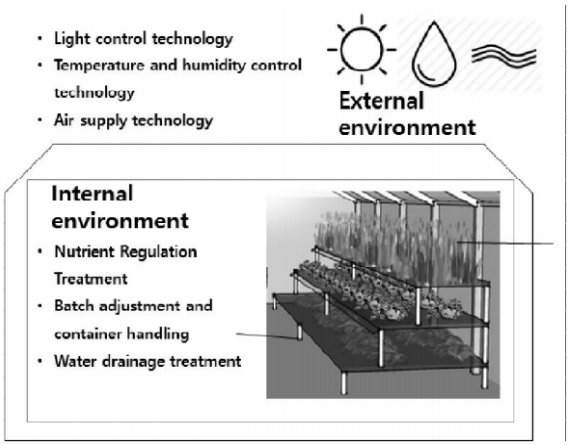

Figure 1.Smart Farm Components

As for the technical standard and competitiveness of plant factory, Europe and USA is about 100% and 90% in automation in 2013, while Korea is only 50~60%. In sensing, Korea is only 60%. Light source, lighting technique and tank farming technique is about

80~90%, but the competitiveness in commercialization complex environmental control equipment for environmental control or control study for entire environmental element is comparatively low[4].

III. SYSTEM DESIGN AND IMPLEMENTATION

C. System requirements

In IoT environment as in figure 2, it must satisfy requirements as follows. First, the sensor networking through GPIO of subminiature computer must be configured. Second, build chatbot message server to collect public data in Linux environment of subminiature computer. Third, compare public and local sensor data in the environment and request user for decision through mechanism.

Automated control which set threshold of control order of user, chatbot and sensor data as standard controls through modbus protocol. The control system is used to change environment through local hardware device.

To measure internal environment element in house cultivation facility or smart farm and collect variation prediction dataof external environment, the study utilized subminiature computer to implement a formation processing simultaneously with one system. Figure 3 shows the block diagram of element examination process of plant factory control through inquiry of local weather forecast data.

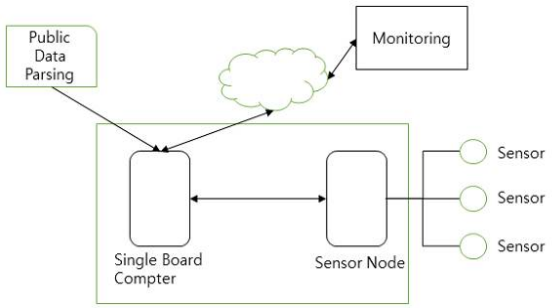

Figure 2.System Configuration

The study utilized API bot provided by Telegram to implement chatbot, and used lua language through provided CLI. As for the hardware platform, the Telegram package was installed and set relevant packages through SNS in Raspberry Pi.The study utilized weather bot which can get parsing of local weather forecast service among public data weather forecast in Japanese provided by the meteorological agency. Also, the study fix the location information of installed device and utilized forecast by certain period of time.

The specific settings are as follows. First, set chatbot by Telegram Bot Api (https://core. telegram.org/bots/api) and search data from Open API of public data for weather forecast.

Then, talk to chatbot to check local forecast data, and save it to show the weather forecast data.This process is always executed using foreverjs.On the same time every day, operate process to give notification about the new weather forecast data.Use built in SQLite in python to process database, and define the table as below.

Weather: Information to inquire the local weather forecast
User: Notification information registered by user
Logs_Process:Process to prevent repeated notification

Use Python's mod_python to get data from data.go.kr.

For the operation of sensor data in field, set the term value in advance, and create script for automatic control through measured sensor data condition. Also, parse the public data of local external elements to utilize as data following the internal element(Fig. 3).

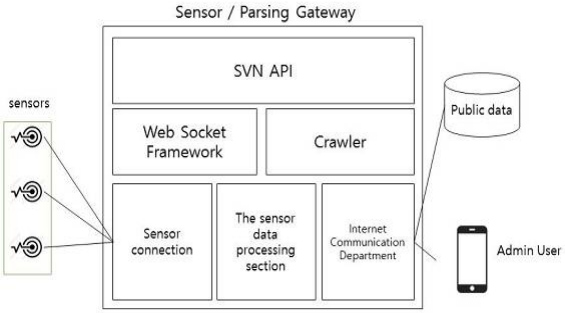

Figure 3. Block Diagram of Senser& Parsing Gateway

D. System implementation

Based on OS that functions as networks configured in Raspberry Pi, the system is implemented as middleware to interface modbus protocol handler to control modbus protocol, serial communication, TCP/IP communication provided by system and signal, thread, process of system level. Data created by sensor is processed through Arduino to deliver data to server. The delivered sensor is connected to interactive API of user to exchange messages.

The study checked real-time data of each sensors and designed to alarm when each sensor is over the allowed threshold. Related sensors check data from temperature and humidity sensor and set threshold value regarding pH sensor and light sensor.

Telegram API utilized ins study is available in various environments such as Web, PC, Android, iOS and enables the change of UX which controls IoT concept objects in chatting format. When Raspberry Pi occurs event,Telegram CLI plays its role as message server connected to mobile device such as transmitting message and file in Linux environment and checking received messages. By installing necessary complies and packages necessary for starting in installation process to install Telegram API through SVN in Linux environment. There are Lua script and Python script for message transmission automation. Lua was installed additionally to Raspberry Pi. To inquire

public data using chat bot on subminiature computer and exchange control message between users, the chatbot server is installed to subminiature computer to inquire local weather forecast data and inquire data at certain time to read it as external environment influential element value of plant factory in operation. For implementation, the study created Telegram bot, ran a server to operate chatbot.

The external element data utilizing additional public data enables checking temperature, weather, rainfall probability, wind speed and humidity in advance which can be utilized in plant factory, and the verified external elements can be utilized as referential data operating plant factory infra. To verify and checklocal forecast elements such as temperature, weather, rainfall probability, wind speed and humidity every 3 hours,the local forecast data is received from meteorological agency and can be used as grounds to make decision for changes of external elements.Also, by verifying the pattern of radical changes of internal elements such as temperature and humidity of plant factory is due to season or climate changes, the short-term forecast data can be compared. Based on this, the system implemented parsing and alarm processing with weather forecast relevant data.

E. Implementation results

Proposed system makes prototype by Raspberry Pi and collected changes in weather forecast regularly through fixed local information. The data collected based on external environmental elements such as temperature, humidity, wind speed of collected local forecast data is utilized as countermeasure of changed weather forecast of the region where subminiature computer is installed.

The measurement of sensor data in actual filed is compared to public data collected in advance and compared with sensor data of controlled filed in priority. General temperature and humidity of weather data and weather forecast is related to temperature, humidity and lighting for interior crop cultivation which is necessary for infra management.

In order to predict and develop the data, the information is delivered to manager, and also the data transmission and delivery of event occurrence of sensor data through chatbot is also available.

CONCLUSION

This thesis collected sensor data utilizing subminiature computer, collect public data regarding external environment related to sensor data and decide complex data about system operation to configure sensor network based IoT and proposed an improved data collection method connecting the external and internal environment element.As for the relationship between sensor data and collected public data, there is a need to conduct additional study for efficient method by the purpose of control regarding the control process through correlation. It is considered to expand the range of economic utilization in collection and utilization of data prediction. In the future, it is expected to conduct a study for integral decision and utilization of two types of data based on specific application cases.

ACKNOWLEDGEMENTS

This work was supported by a grant from Seoul Accord Fund(R0613-16-1148) of Ministry of Science, ICT and Future Planning(MSIP), IITP

REFERENCES

[1] Dong Yoon Park, Seong-Teak Jang andSeong-Ju Chang, “Numerical Study on the Thermal Environment of a Natural Light Based Multi-layered Plant Factory,” Korea Institute of Ecological Architecture and Environment, vol. 13(5), 2013.10, pp. 43-50, September 2013.

[2] Yumi Oh and Sungwon Lee, “IoT and Open Source Development Platform,” Communication of the Korea Information Science Society, vol. 32(6), pp. 25-30, June 2014.

[3] AnRyeolJeong, TaeHee Han andKyoungSeung Chu, Shinon Lee “Design of Smart Bell System based Internet of Things using Raspberry Pi,”Korean Society for Internet Information, vol. 17(1), pp.165-166, April 2016.

[4] Sung-Il Hwang, Jong-Moon Joo and Seong-Yong Joo, “ICT-Based Smart Farm Factory Systems through the Case of Hydroponic Ginseng Plant Factory,” Korea Institute Of Communication Sciences, The Journal of The Korean Institute of Communication Sciences, vol.40(4), pp. 780-790, April 2015.

★★★