# SYSTEM DESIGN OF INTEGRATION OF RFID AND WSN VIA WIRE

**[1]HARISH G, [2]M.Z.KURIAN**

[1,2]Dept of Electronics and Communications, Sri Siddhartha Institute of Technology, Tumkur, Karnataka, India.
E-mail: [1]harish.rgprh@gmail.com, [2]mzkurianvc@yahoo.com

**Abstract-** Radio Frequency Identification (RFID) and wireless sensor network (WSN) are two important wireless technologies that have a wide variety of applications in current and future systems. Here the system has been proposed for the integration of active RFID along with the WSN with the help of wire. By using the integration of RFID and WSN that is multiple sensors are blended to active RFID tag and through a RFID protocol it is being communicated with the reader, where the reader acts as a smart hub, which collects the information and passes to the user. This increases the coverage area of the WSN, reduces the power used by the tag to transmit the data. It can be widely used in military, environmental minority, health care etc.

**Keywords-** Rfid, Wsn, Zigbee, Smarthub.

## I. INTRODUCTION

RFID systems and WSN's are emerging as the most ubiquitous computing technologies in history due to their important advantages and their broad applicability. WSN will sense and gives the information of the environment and RFID will give the information of the object. Here the data that has collected once as the temperature, pressure etc., will be stored in the RFID tag rather than transferring or transmitting continuously by which the power of the WSN will be judiciously saved. Also with the use of Zigbee transmission protocol in the intermediate end it covers more area when compare to traditional works. The data's which are so transferred from the RFID tag will be generated only when the user asks for the information, by doing this the energy in the sensor network is used whenever it is needed. Hence energy can be stored and saved for a longer time compared to normal adhoc networks. The next part will give the details on previous works carried by the various personalities all over the globe.

## II. RELATED WORK AND CONTRIBUTIONS

Huiyun Li[1] presented how to develop and implement the RFID technology. For a passive RFID system, the communication between the reader and the tag is fully controlled by the reader. The communication from the reader to the tag is referred to as the forward link, while the communication from the tag to the reader is referred to as the reverse link. The below figure 1 which shows the components of an RFID tag.

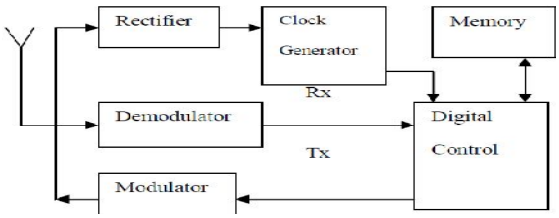


**Fig 1 RFID Tag Block Diagram**

The tag consists of tag antenna and tag chip ID. The tag chip contains a RF-analog front end code, a digital control block which controls the whole system, and a non-volatile memory. The ASK demodulator uses envelope detection and comparison with the average of the input voltage to recover baseband data. The PSK backscatter modulation is for reverse link communication. The security of proposed secure low-cost RFID system depends largely on the digital control block of the RFID tags, which acts as an identity tag, carrying only the unique serial number and an ID number. The tag requires no cipher key or password shared between tags and readers for authentication,thus eliminate the need of huge work on key distribution and management. The principal diagram of the main control part which is given in the figure 2.

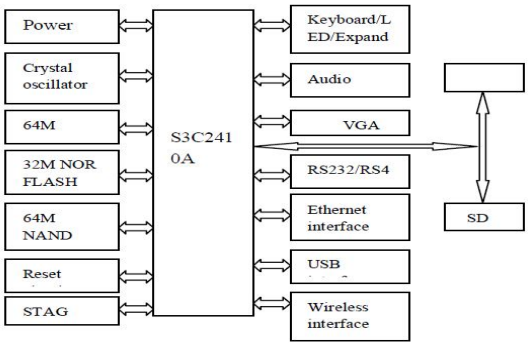


**Fig 2 Principal Diagram Of Main Control Part**

The control part of UHF RFID reader mainly realizes following functions: (1) communication formed with application software of the computer and execute the commands from the application system software eventually; (2) complete the quick real-time communication with tags; (3) the coding and the decoding of transmitted signals into digital format and vice versa; (4) in some complex system, control part also executes anti-collision arithmetic; (5) encrypt and decrypt the transmitted data between tags and the reader, do ID validation between tags and the reader. Data exchange between control part and

application software is done mainly by the communication interface of the reader. The interface can adopt RS-232 or RS-485. It also can adopt RJ45 or WLAN interface.

Lei Zhang and Zhi Wang [2] explained the requirements of designing the wireless technology which is needed to monitor the data and transmit the data in the real time applications. Further the product life cycle model to frame the challenges and potential solutions in WSN development. A wireless sensor network is a system which configures, diagnoses, heals by itself. Sensor networks consist of tiny low powered computing network node with extremely restricted computational, communication and battery capability. The below figure 3 shows the organizing of wireless sensor network.

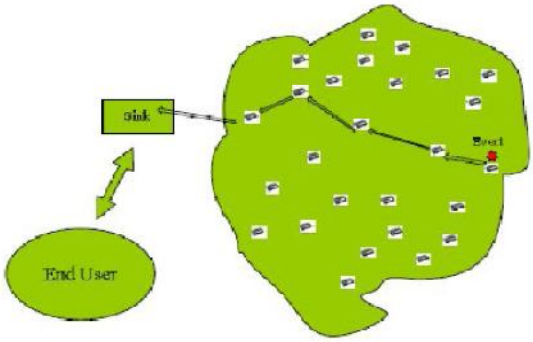


**Fig 3 Wireless Sensor Network**

The functional block diagram of a typical RFID tag which is shown in the below figure 4.

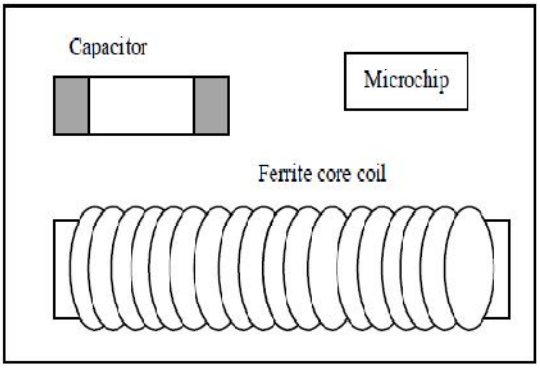


**Fig 4 RFID Tag**

The functional block diagram of a typical RFID reader is shown in the figure 5.

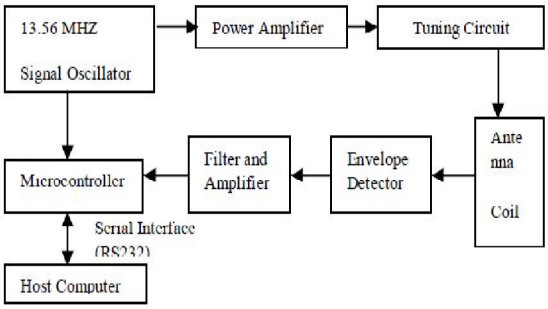


**Fig 5 RFID Reader**

The smart node which consists sensing part which makes use of sensors to detect interested physical scenario, reading part which reads fewer tags comparing with a normal RFID reader. This has been depicted in the figure 6.

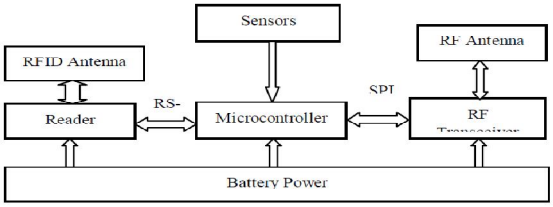


**Fig 6 Smart Hub**

Hai Liu and Miodrag Bolic [3] described Radio frequency identification and wireless sensor networks are two important wireless technologies that have a wide variety of applications in current and future systems which are accessed for the betterment of human beings. RFID facilitates detection and identifies the objects that are not easily detectable or distinguishable by using conventional sensor technologies. WSN, on the other hand, not only provides information about the condition of the objects and environment but also enables multi hop wireless communications. Hence, the integration of these technologies expands their overall functionality and capacity. They proposed the novel methods of integrating the devices, they are as follows

Integrating RFID tags with sensors,

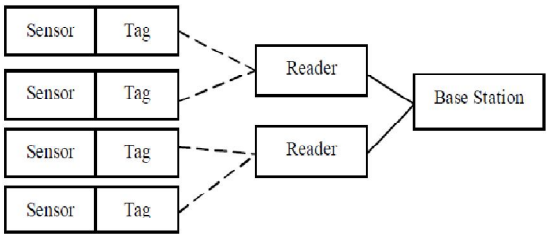


**Fig 7 Sensor Tag Integration**

The figure 7 indicates that the a sensor is being integrated into the tag so that the data is being transferred into the reader through wireless communication and from reader to the base station it is through the use of wired communication. Integrating RFID tags and WSN nodes, As in the above case instead of integrating with every single sensor here, the whole sensor node is integrated so that the integration cost will become less as shown in the figure 8.

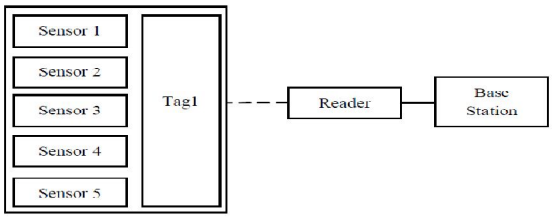


**Fig 8 Node- Tag Integration**

Integration of wireless sensor nodes with RFID readers,

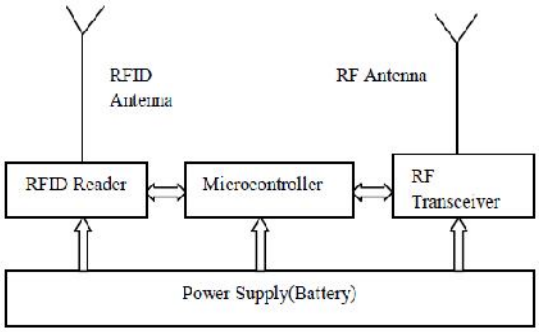


**Fig 9 Reader Node Integration**

In this method which is being depicted in the figure 9 a reader is directly integrated with the sensor node and from here the data along with the tag detection is forwarded to the base system.

Integration of RFID system and wireless sensor networks into a network. In this method both the RFID systems as well as the wireless sensor network and both are being considered as a single network.

A.V.Nedeclu and V.C. Stoianovici [4] showed how energy can be efficiently saved in the integrated systems by proposing and showing how to capitalize the unexplored potential of the two complementary technologies, and by creating a network of hybrid nodes which are capable of promoting their features and functionalities to the applications that use them.

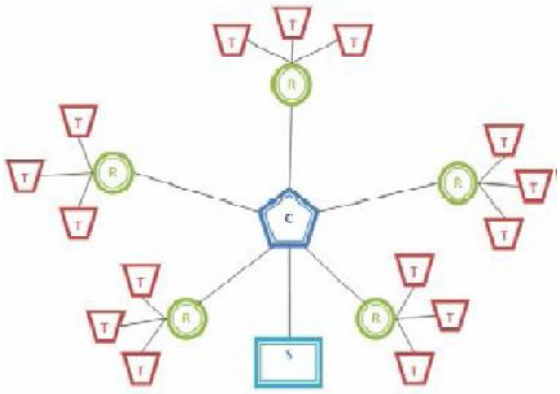

**Fig 10 Architecture Of Hybrid WSN RFID Network**

Architecture of WSN and RFID network is shown in the figure 10. Here a server is used which acts as a middleware data aggregator and hence helps in energy storing as stated earlier.

Dheeraj K Klair and Darryn Lowe [5] presented that Radio frequency identification (RFID) systems are getting popular for automatic object identification and also integrating with the wireless sensor networks which have the ability to organize and identifies the tagged objects, performs localization, and with the aid it carry out searches; all of which are enablers of pervasive computing. The interactions between a reader and tags is shown below in the figure 11.

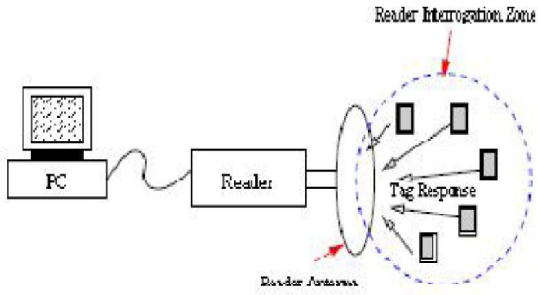


**Fig 11 Interaction Between Tag And Reader**

While the interaction between the components there is a collision and there is a chance of losing the information. The collision might occur as tag collision or it might occur as reader collision. This has been depicted in the figure 12. Whereas tags collision arise due to multiple tags respond simultaneously to a reader's tags respond simultaneously to a reader's request, which causes collisions at reader. This problem has been depicted in the figure 13.

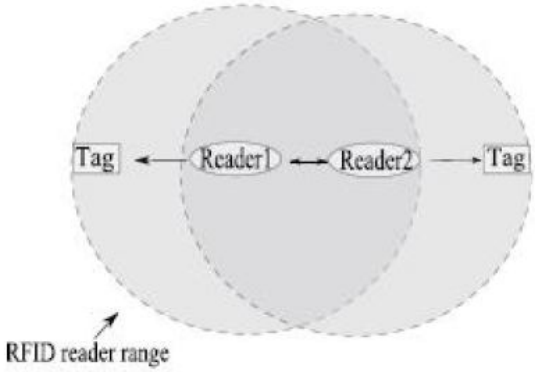


**Fig 12 Collision Between The Readers**

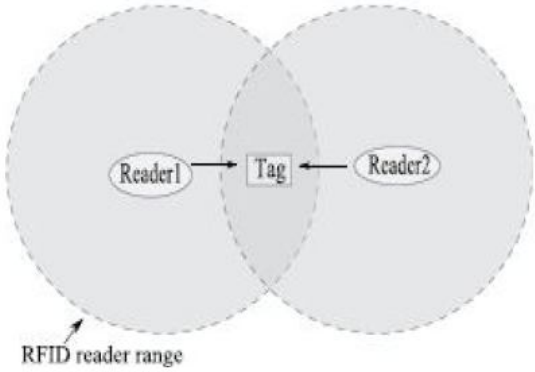


**Fig 13 Collision Between The Tags**

To overcome the problems of collision between the readers and tags and to have the efficient interaction between the reader and the tags the following parameters has to be taken care which are as follows tag reading ability, coverage area of a sensor network, localization, search and storage capability of a tag and then monitoring ability of a base system.

Usha Kiran Vishwakarma, R. N. Shukla [6] explained the necessity of integration between RFID and WSN for the future by stating the differences in between them, which are listed in the following table.

**Table 1: WSN versus RFID systems**

| Characteristics | Wireless Sensor Network | RFID |
|---|---|---|
| Communication | Multi hop | Single hop |
| Mobility | Static | Dynamic |
| Programmability | Programmable | Closed systems |
| Deployment | Random or fixed | Fixed |
| Design goal | General purpose | Single purpose |

Gangi Raghu Ram and Sudhakar [7] described RFID is used to detect presence and location of objects while WSN is used to sense and monitor the atmospheric environment in an application. Radio frequency identification is another identification system that uses radio frequency for object and location identification. In recent days, RFID has provided cost effective solution for object identification in areas like parcel distribution, airline luggage ID, security enabled smart keys and etc. To identify a moving object within a wireless space that does not have wireless capabilities, the only possible solution is to integrate wireless networks and RFID. Integrating these two technologies will provide low-cost solution for object identification and tracking for wide range of applications. RFID acts as of storing and retrieving data through electromagnetic transmission.

Hai Liu, Miodrag Bolic, Amiya Nayak, Ivan Stojmenović [8] showed the methods of pervasive computing. A single hardware platform will most likely not be sufficient to support the wide range of possible applications. In order to avoid the development of application specific hardware, it would be desirable, however, to have available a (small) set of platforms with different capabilities that cover the design space. Then after showing the difficulties in the design space he stated that in order to have a convenient communication among the technologies a novel method like integrating one technology with other technology is required.

Carlos E. Palau and Manuel Esteve [9] proposed how the application based on these technologies can be used in industrial environment by giving that component is an advanced multi-mode, low cost wireless node provided with parallel processors that could considerably increase performance, robustness and flexibility of applications at the time of effectively working into real-world in the context of no dense heterogeneous sensor networks. The coexistence and the optimized cooperation and competition between heterogeneous actors allow advanced application working on the same communication infrastructure.

## III. SYSTEM DESIGN

The basic block diagram of the proposed methodology is displayed below in the figure 14, in which the multiple sensors are blended into a tag through a wire. The smart tag will get the information of the object and surrounding. The smart tag in the block diagram has the multiple analog sensors such as temperature, pressure and humidity are wired into a tag. After the collection of data, the data will be transmitted to the RFID reader by every individual RFID tag, here RF protocol is used so that the transmission of data occurs whenever the command is recieved by the antenna and the same transmission is done through the former protocol. As soon as the reader reads the data the node which acts as the polling node will transmit the data into the pc reader.

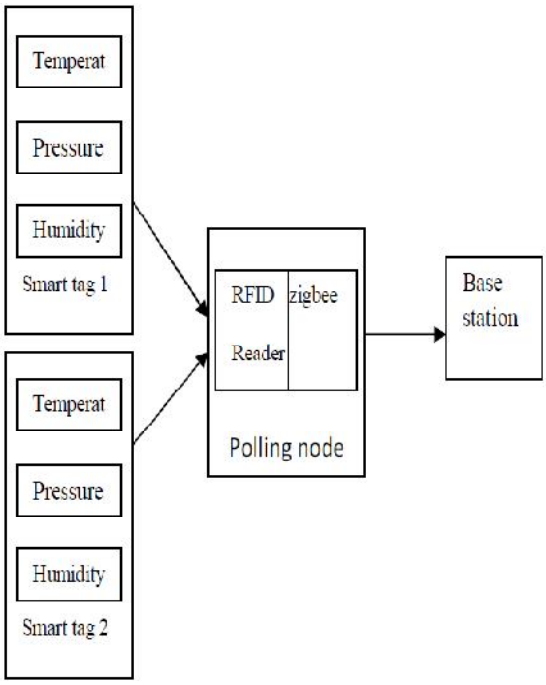


**Fig 14 Block Diagram Of Integration Of RFID And WSN**

Smart tag consists of sensors, microcontroller and EEPROM as its components along with the RFID components such as antenna, RFID ic. The 16 bit microcontroller acts as the control unit for the tag. 10 bit ADC is used to convert the analog signals into digital signals. The low power AC takes the conversion time of 14 microseconds. Through the RFID protocols the data is transmitted to the reader.

The smart reader consists of a RF engine along with a wireless sensor node. This will act as a polling node. In the pc we will have a database to compare the data between the present and the previous values so that it gives an access to real time application.

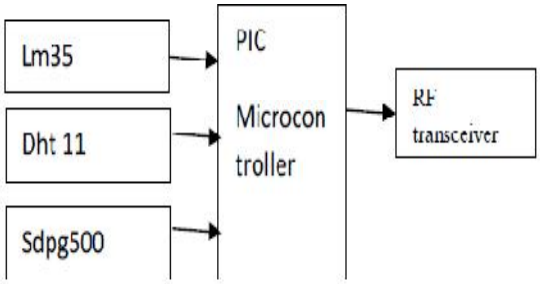


**Fig 15 Integrated Sensors**

The above diagram 3.2 shows the various sensors such as LM35 which is a temperature sensor is connected along with the Dht11 which is a humidity sensor is latched with Sdpg5000 which is a pressure sensor and all are connected to PIC microcontroller. Here the microcontroller collects the data in the analog nature and then it converts the data into digital form and then it is transmitted to CC2500. Here the data conversion rate is 14 microseconds.

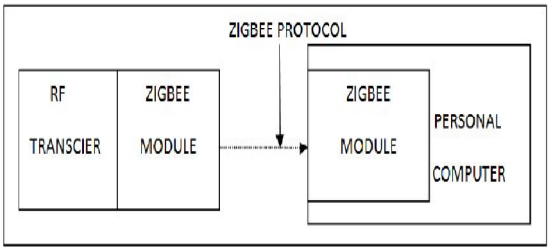


**Fig 16 Polling Station**

The above diagram depicts the hardware setup of the polling station and its way of communicating with the base station. A polling station consists of RF transceiver which acts as the RFID reader that receives the data from the smart tag. And from here the data is again transmitted with the help of zigbee module. Here zigbee is used in order to communicate for the longer distance.

## IV. EXPECTED RESULTS

i. As the wake up time is reduced in the microcontroller it can be seen that the power consumption in the overall wireless sensor network is reduced.
ii. With the possibility of dynamic characteristics in the WSN. The sensing area of the environment will be increased.

## V. ADVANTAGES

i. Coverage area will be increased.
ii. Data rate between the reader and tags gets increases.
iii. Data will not be lost since radio wave interference is not there.
iv. Providing dynamic characteristics to WSN.

## VI. APPLICATION

i. In the field of logistics.
ii. In the field of industries to find the automobiles.
iii. In the commercial fields such as malls, etc.
iv. In the hospital to monitor medicines.

## CONCLUSION

Undoubtedly, the integration of RFID and WSN's is an imminent step that will lead to a high level of synergy and more technological advances. This integration will give an advantage not only to reveal an item's location and identify but also its current state. These integrated networks will extend traditional RFID systems and will give us an important advantage in monitoring industrial purposes. This paper gives the novel method of integration of RFID and WSN for various applications.

## REFERENCE

[1] Huyin Li "development and implement of RFID technology" in Shenzhen Institute of Advanced Technology, Chinese Academy of Sciences, China 2009
[2] Lei Zhang and Zhi Wang "Integration of RFID into Wireless Sensor Networks: Architectures, Opportunities and Challenging Problems" in National Laboratory of Industrial Control Technology, Institute of Industry Process Control, Zhejiang University, Hangzhou 310027, P.R.China in 2006.
[3] H. Liu, M. Bolic, A. Nayak and I. Stojmenovic, "Taxonomy and Challenges of the Integration of RFID and Wireless Sensor Networks," IEEE Network, vol. 22, no. 6, pp. 26-35, November- December 2008.
[4] A.V.Nedeclau, V.C.Stolanovici, I.Szekesly" Energy-efficient integration of WSNs with active RFID systems" in the bulletin of Transilvania University of Braşov Vol. 4 (53) No. 1 - 2011.
[5] D. Klair, K. Chin, R. Raad & D. Lowe, "A Spatially Aware RFID-Enhanced Wireless Sensor Network," in IEEE International Conference on Pervasive Computing and Communications, 2008, pp. 13-16.
[6] Usha Kran Vishwakarma, R.N Shukla "WSN AND RFID: DIFFRENCES AND INTEGRATION" International Journal of Advanced Research in Electronics and Communication Engineering (IJARECE) Volume 2, Issue 9, September 2013
[7] Gangi.Raghu Ram, N.Rajesh Babbu, N.P.Sudhakar, Balanagu.Raviteja, K.Rammohanrao "Tracking objects using RFID and Wireless Sensor Networks" in international journal of engineering science & advanced technology volume-2, issue-3, 513 – 517 in 2012.
[8] Hai Liu, Miodrag Bolic, Amiya Nayak, Ivan Stojmenović, "Integration of RFID and Wireless Sensor Networks" p1-p4 2004.
[9] Carlos.E.Palau and Manuel Esteve "Modelling and optimization in mobile, Adhoc and Wireless Network" in Wi-opt France2010.

★★★