COMPARISON OF SENSOR BASED AND SENSOR LESS TECHNIQUE TO ESTIMATE ROTOR POSITION

[1]SHARAD GOYAL, [2]MANISHA DUBEY

[1]M.Tech Scholar, Maulana Azad National Institute of Technology Bhopal
[2]Professor, Department of Electrical Engineering, MANIT Bhopal
Email: sharad79284@gmail.com, md_mact@yahoo.co.in

Abstract- In this paper comparison on rotor position estimation method based on Hall-effect sensors and sliding mode observer (SMO) is presented. The estimation of phase or the rotor angle of Permanent-magnet Synchronous Motor (PMSM) is essential parameter which is required to control the drives. Due to low cost & wide ranging performance, Low-resolution Hall sensor is widely used in PMSM. Sliding mode observer is a sensor less technique for which control algorithm is implemented. As a result SMO has shown better performance during sudden load changing condition while under steady state condition Hall sensors shown better performance. At starting Hall sensors has sensed the rotor angle effectively but SMO has depressed in this area. Results of Matlab/Simulink have shown comparison of both angle estimation techniques at different situation.

Keywords- Comparative study, Hall Effect sensor, PMSM, Sliding Mode Observer

I. INTRODUCTION

Introduction: Permanent Magnet Synchronous Motors are being widely used in many industrial applications due to high torque, power density, robustness, less maintenance, compact size and high efficiency. It has shown many other advantages due to absence of brushes. Various control schemes also has evolved to control the PMSM drive system. But in each control scheme to estimate the rotor position has always been the important task. Generally sensors were using to get the information of rotor position such as hall sensors, resolver, encoder etc. However installation of these mechanical sensors increases the size and cost of drive installation. Therefore in order to reduce the cost, noise, maintenance and complexity various sensorless based schemes developed to extract rotor position such as observer based, back EMF method, flux estimation, Kalman filter and signal injection technique. Among these techniques sliding mode observer is widely used due to easy algorithm and also has shown desirable performance on changing the load and parameter.

In this paper rotor position of PMSM is estimated using Hall Effect sensors and SMO, and results are compared on acceleration, deceleration and steady state conditions. The rotor position with high-resolution can be easily estimated through a various method based on Hall sensors which have proposed in. The phase angle has estimated using average rotor speed where the six states are classified according to the Hall sensor's signals. SMO technique used in this paper used high switch gain with self-adaption rate to avoid oscillation during parameter variation. Design of Slide Mode Observer is presented with sensorless control scheme. Results are obtained by simulation and are concluded with comparison.

II. HALL EFFECT SENSORS BASED TECHNIQUE

Here two pole PMSM is modeled with misaligned Hall Effect sensors. According to the Low resolution hall sensors position, the information of rotor position can be obtained with a resolution of $\pm 30^o$.

The method based on average rotor speed can easily estimate the rotor position with high resolution. The six sectors are divided according to the states of the Hall sensor's signals. Algorithm obtained from Taylor series expansion for rotor position estimation is of zeroth order. The rotor speed within a single sector is assumed constant and uniform speed in current and previous sector as well. And rotor speed can be defined as:

$$\omega_h = \frac{\frac{\pi}{3}}{\Delta t} \qquad (1)$$

Where Δt is time duration of rotor magnetic axis of previous sector. Now if integrate (1), & if increment of rotor phase in one timer period is considered then the rotor position within a sector can be obtained as

$$\tilde{\theta}_r = \theta_s + n\omega_h T_s \qquad (2)$$

Where θ_S is the absolute rotor angle with in sector limit, n is the steps of integration during the time interval of the present sector and T_s is the time of sampling. The rotor position is determined by $\tilde{\theta}_r$ and follows $\theta_s \le \tilde{\theta}_r \le \theta_s + \frac{\pi}{3}$

If the Hall sensors are aligned in the motor symmetrically, the rotor angle estimation from (2) may be notably accurate value at the steady-state operation. But due to variable speed operation misalignment may cause unwanted error. Because in control algorithm like Field Oriented Control, to predict the rotor position the calculated rotor speed is of last section. This implies the non real speed estimation, hence generate the phase delay. This delay is also shown in simulation result below. Also

error occurred in position estimation if speed is not constant and these variations may be due to acceleration, braking etc. Thus load fluctuation causes the mortification in performance like torque ripple and phase current disfigurement [7], [13].

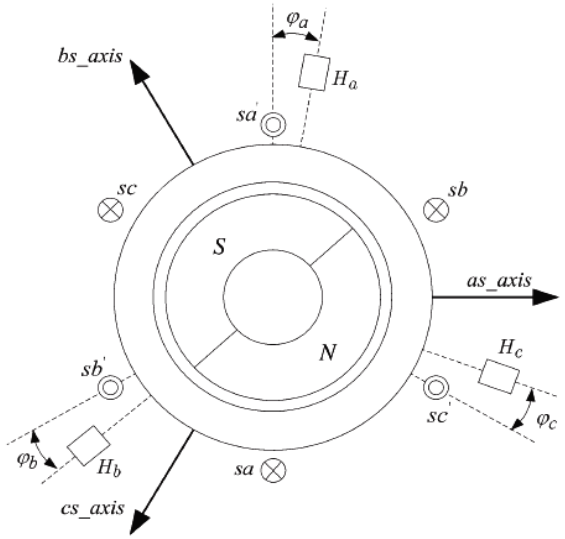

Figure 1: Two-pole PMSM with misaligned Hall-effect sensors.

A two-pole PMSM with Hall sensors is shown in Fig. 1, where Φa, Φb & Φc represent the difference of angle between the stator magnetic axes and the misaligned placed Hall sensors analogously. Let's take out a case of simulation to understand the effect of misalignment. When the angle differences Φa, Φb & Φc were −15, 10, and 10 electrical degrees, respectively, the output of Hall sensor shows the estimated resultant position in Fig. 2.

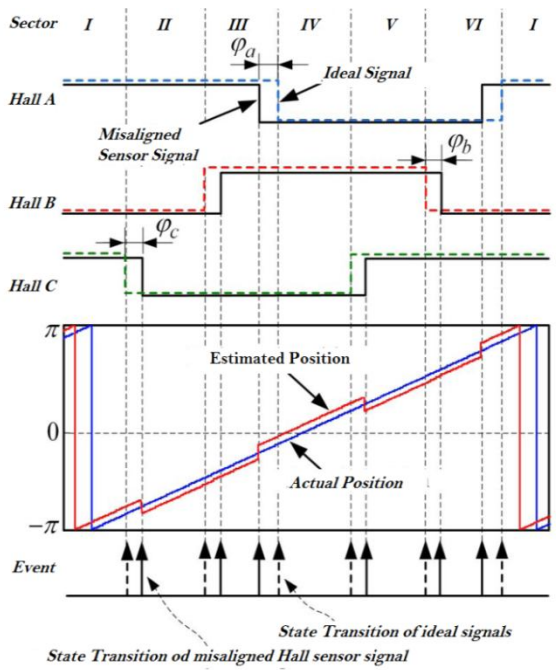

Figure 2: Output signals of the Hall sensors and resultant position estimate.

In this figure, the rotor position is dynamically distorted at each transition state of the Hall sensors' signals. The transient conditions like start-up, speed-up and load change raise the position estimation error since average speed in each sector vary according to operation.

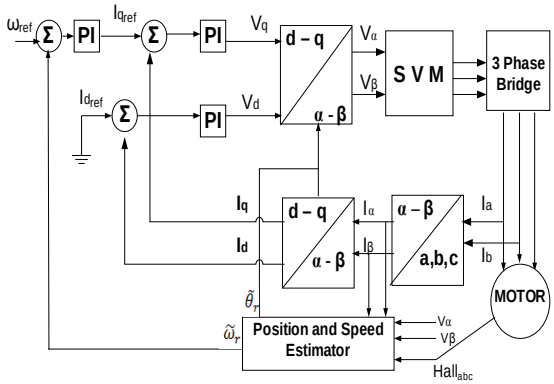

Figure 3: Control scheme of the PMSM drive with Hall-effect sensors

III. SLIDING MODE OBSERVER BASED POSITION ESTIMATION

The state equations of PMSM under stationary frame is

$$\frac{di_a}{dt} = -\frac{1}{L}e_\alpha - \frac{R}{L}i_\alpha + \frac{1}{L}v_\alpha \quad (3)$$

$$\frac{di_\beta}{dt} = -\frac{1}{L}e_\beta - \frac{R}{L}i_\beta + \frac{1}{L}v_\beta \quad (4)$$

Where iα & iβ are current in α-β axis in stationary frame, vα & vβ are voltage in α-β axis in stationary frame and eα & eβ are back emf on α-β axis. According to sliding mode variable theory [9], state variables are selected as the stator current. The Slide-mode observer of the PMSM described as:

$$\frac{d\tilde{i}_a}{dt} = -\frac{R}{L}\tilde{i}_\alpha + \frac{1}{L}v_\alpha - \frac{K_{sw}}{L}\text{sign}(\tilde{i}_a - i_\alpha) \quad (5)$$

$$\frac{d\tilde{i}_\beta}{dt} = -\frac{R}{L}\tilde{i}_\beta + \frac{1}{L}v_\beta - \frac{K_{sw}}{L}\text{sign}(\tilde{i}_\beta - i_\beta) \quad (6)$$

Where$\tilde{i}_a$, $\tilde{i}_\beta$ are estimated current on α-β axis, Ksw is slide mode coefficient and sign ( ) is switching function. The dynamic error of the current is obtained by subtracting Eq.5 & Eq.6 and we get,

$$\frac{d\hat{i}_a}{dt} = -\frac{R}{L}\hat{i}_\alpha + \frac{1}{L}e_\alpha - \frac{K_{sw}}{L}\text{sign}(\hat{i}_a) \quad (7)$$

$$\frac{d\hat{i}_\beta}{dt} = -\frac{R}{L}\hat{i}_\beta + \frac{1}{L}e_\beta - \frac{K_{sw}}{L}\text{sign}(\hat{i}_\beta) \quad (8)$$

Where values with '^'shows difference between the observed value of the variable and the actual value. The sliding hyperplane S characterize the current error by switching function as $S_1=\tilde{i}_s-i_s$

Applying Lyapunov theory of stability and thus derivative of Lyapunov function 'V1' obtained as

$$\dot{V}_1 = S_1^T S_1 < 0 \quad (9)$$

Therefore using (7), (8) & (9) the range of Ksw can be obtained as $K_{sw} > max\,(|e_\alpha|, |e_\beta|)$ which satisfies the generation of slide mode motion. The system start the slide motion when the slide mode switching status S1=0. Back EMF can be estimated in this mode by using error dynamic equation with $\hat{i}_\alpha$ & $\hat{i}_\beta = 0$.

Estimated back EMF obtained by the conventional low pass filter has constant cutoff frequency irrespective of rotor speed. Therefore low pass filter with variable cutoff frequency can carry out necessity of wide speed response [10] & EMF estimated as:

$$\tilde{e}_\alpha = \frac{\omega_c e_\alpha}{s+\omega_c} \qquad (10)$$

$$\tilde{e}_\beta = \frac{\omega_c e_\beta}{s+\omega_c} \qquad (11)$$

Now rotor angle can be estimated by using (10) & (11) as

$$\tilde{\theta} = \tilde{\theta}_0 + \Delta\tilde{\theta} = \arctan(-\tilde{e}_\alpha, \tilde{e}_\beta) + \arctan\left(\frac{\tilde{\omega}}{\omega_c}\right)$$

Where $\Delta\tilde{\theta}$ is compensation providing due to phase delay origination from low pass filter. Configuration of PMSM control system with Sliding Mode Observer is shown.

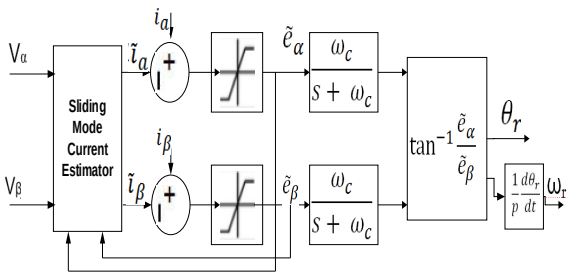

Figure 4: Sliding Mode Observer for speed and position estimation

IV. SIMULATION RESULTS

Simulink Model of SMO is shown in fig.

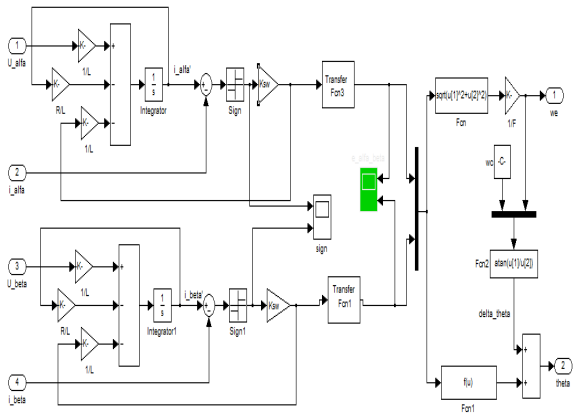

Figure 5: Simulink model of Sliding Mode Observer in MATLAB

Simulation results show the comparison of angle estimation by both techniques. The comparison between Slide Mode Observer and Hall Effect sensor is performed on PMSM in different operating state

Fig 6 shows the position estimation of rotor by Hall Sensors in starting condition. The estimated result shows that there is a phase delay in position estimation and starting angle was measured with some ripple. Whereas starting operation by the SMO fails (fig 7) because of presence of noise in estimated speed and noise debilitate the closed loop PMSM control system

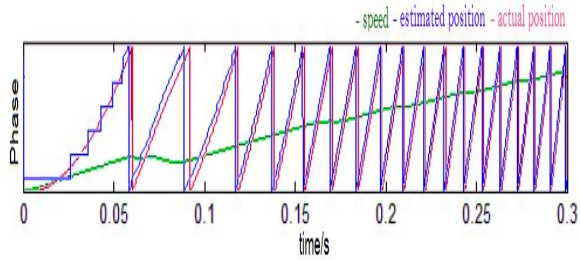

Figure 6: Phase estimation by Hall sensors at starting condition

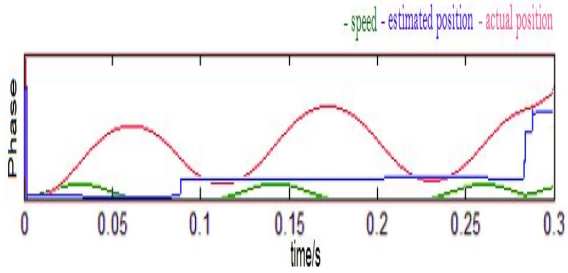

Figure 7: Phase estimation by SMO at starting condition

In steady state, Hall sensor based technique showing superiority on SMO. As shown in fig 8 and fig 9, there is no ripple component in phase estimation by Hall Effect sensors, whereas SMO shows some ripple component which are due to estimated observer algorithm.

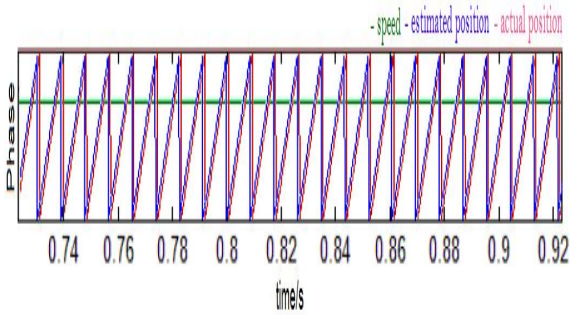

Figure 8: Phase estimation by Hall sensors at steady state condition

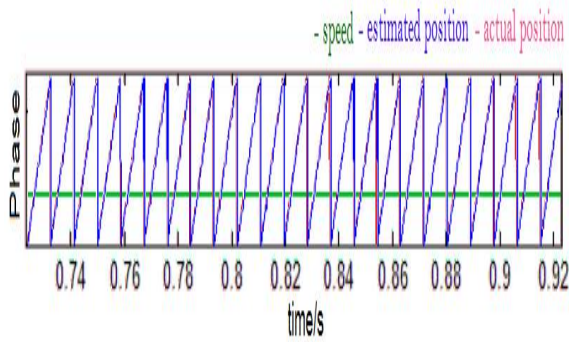

Figure 9: Phase estimation by SMO at steady state condition

Fig 10 displays the sensor based rotor angle estimation in speed fluctuating state. It is observed that by varying the speed phase error rises in Hall sensor strategy. On comparing the steady state operation with fluctuating speed operation it is discovered that differentiability occurred in phase

estimation and it is due to phase delay and error in speed prediction. Whereas no such vibrating or deformities observed in SMO technique as shown in fig 11.

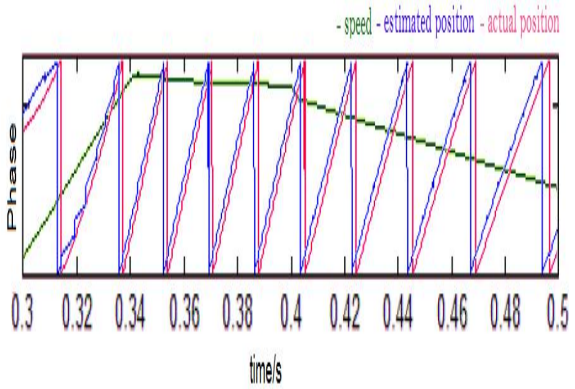

Figure 10: Phase estimation by Hall sensors at speed fluctuation condition

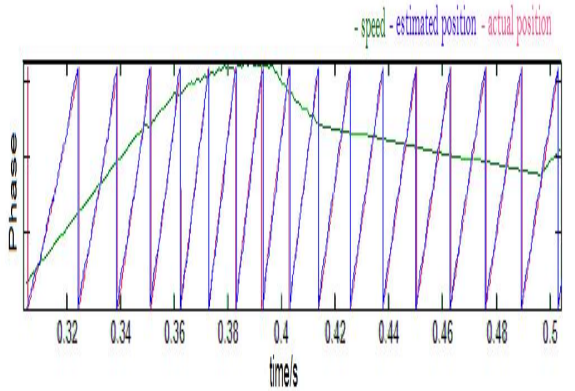

Figure 11: Phase estimation by SMO at speed fluctuation condition

CONCLUSION

On the basis of simulation result it can be concluded that the PMSM can be operated in starting condition by Hall sensors while SMO is unable to start the motor. Under steady state condition Hall sensors has shown better operation than SMO with no deformity and ripple component. But under speed fluctuation state the control effect of Hall sensors has some distinct deformities which were not occurred under steady state. SMO has shown dominance in speed fluctuation condition with no differentiability in phase estimation. Hence Hall sensors have shown wide ranging application whereas SMO has higher quality result on varying load and speed fluctuation.

REFERENCES

1. Benjak, O.; Gerling, D., "Review of position estimation methods for IPMSM drives without a position sensor part I: Nonadaptive methods," Electrical Machines (ICEM), 2010 XIX International Conference on, vol., no., pp.1,6, 6-8 Sept. 2010.
2. Benjak, O.; Gerling, D., "Review of position estimation methods for IPMSM drives without a position sensor part II: Adaptive methods," Electrical Machines (ICEM), 2010 XIX International Conference on , vol., no., pp.1,6, 6-8 Sept. 2010]
3. Benjak, O.; Gerling, D., "Review of position estimation methods for PMSM drives without a position sensor, part III: Methods based on saliency and signal injection," Electrical Machines and Systems (ICEMS), 2010 International Conference on , vol., no., pp.873,878, 10-13 Oct. 2010.
4. Dalala, Z.M.; Younghoon Cho; Jih-Sheng Lai, "Enhanced vector tracking observer for rotor position estimation for PMSM drives with low resolution Hall-Effect position sensors," Electric Machines & Drives Conference (IEMDC), 2013 IEEE International , vol., no., pp.484,491, 12 15 May 2013
5. T. Tesch, “Dynamic torque estimation in a sensor limited environment,” Ph.D. preliminary examination presentation, Dept. Mech. Eng., Univ. Wisconsin, Madison, Aug. 2000
6. A. Lidozzi, L. Solero, F. Crescimbini, and A. Di Napoli, “SVM PMSM drive with low resolution Hall-effect sensors,” IEEE Trans Power Electron., vol. 22, no. 1, pp. 282–290, Jan. 2007
7. B. B. Philip, D. P. Steven, J. D. Bradley, and C. K. Andreas, “Compensation for asymmetries and misalignment in a Hall-effect position observer used in PMSM torque-ripple control,” IEEE Trans. Ind. Appl., vol. 43, no. 2, pp. 560–570, Mar./Apr. 2007
8. F. Giulii Capponi, G. De Donato, L. Del Ferraro, O. Honorati, M. C. Harke, and R. D. Lorenz, “AC brushless drive with low-resolution Hall-effect sensors for surface-mounted PM machines,” IEEE Trans. Ind. Appl., vol. 42, no. 2, pp. 526–535, Mar./Apr. 2006.
9. K. L. Kang,lM. Kim.Sensorless Control of PMSM in High speed Range with Iterative Sliding Mode Observer. Proceedings of IEEEAPEC' 04 . 2004(2) • 1111- 1116
10. K. Kang, J. Kim, K.-B. Hwang, and K.-H. Kim: submitted to IEEE APEC (2004).
11. Zhaowei Qiao; Tingna Shi; Yindong Wang; Yan Yan; Changliang Xia; Xiangning He, "New Sliding-Mode Observer for Position Sensorless Control of Permanent-Magnet Synchronous Motor," Industrial Electronics, IEEE Transactions on , vol.60, no.2, pp.710,719, Feb. 2013
12. J. B. Chu, Y. W. Hu, W. X. Huang, M. J. Wang, J. F. Yang, and Y. X. Shi, “An improved sliding mode observer for position sensorless vector control drive of PMSM,” in Proc. IEEE Power Electron. Motion Control Conf., May 2009, pp. 1898–1902
13. M. C. Harke, G. De Donato, F. Giulii Capponi, T. R. A. Tesch, and R. D. Lorenz, “Implementation issues and performance evaluation of sinusoidal, surface-mounted PM machine drives with Hall-effect position sensors and a vector-tracking observer,” IEEE Trans. Ind. Appl., vol. 44, no. 1, pp. 161–173, Jan./Feb. 2008

★★★