PARAMETERS CALCULATION AND CLASSIFICATION OF ECG SIGNALS USING LAB VIEW

[1]DEEPA PAUL, [2]PRIYANKA CHOUDHARY, [3]RAM AVTAR JASWAL

[1,2]P.G Scholar, Electrical Engineering, UIET Kurukshetra University, Hrayana, INDIA
[3]Assistant Professor, Electrical Engineering, UIET Kurukshetra University Hrayana, INDIA
E-mail: [1]deepapaul91@gmail.com, [2]Pinku064@gmail.com

Abstract— "Why are we using LABVIEW to study ECG in a better fashion?" Keeping this question in mind, we wrote this paper contract with study and performance of ECG signal processing in LABVIEW with biomedical toolkit 2013. The raw ECG is attain from physio.net MIT-BIH Data base. These tools can also help us to denoising, detrending, and extracting ECG signal. Study of ECG signals of different filtering techniques includes WA De-trend Express VI, Wavelet De-noise, Wavelet packet from wavelet families. Besides, Features are extracted with LABVIEW as a successful way to calculate the parameters of ECG signal more expediently. LABVIEW with its signal processing prove that it is easy and strong for resolving ECG signal processing problems as compared to MATLAB software.

Keywords— ECG parameters, LABVIEW Biomedical Toolkit, MIT-BIH data base, WA De-noise , Wavelet transform.

I. INTRODUCTION

ECG (Electro-Electrical Signals, Cardio-Heart, Gram- Graph) is an electrical activity or movement of heart which is recorded by placing electrode on human body at different parts which is shown in graph is called electrocardiogram (ECG). ECG signal is non-stationary signals, hence it changes with time so it very difficult to proper diagnosis the disease of heart patients. An ECG signals represents heartbeats consisting of P Wave, QRS Wave, T Wave and U Wave. The amplitude, duration and interval between each of these waves help us distinguish between normal and abnormal waveforms. The ECG ranges from a few µV to about 1V in magnitude. Whereas the characteristic waves of an ECG have a maximal magnitude of only few mV, a wandering baseline in the ECG due to variations in electrode-skin impedance may reach 1V. The amplifier Bandwidth is commonly between 0.05 and 100-500Hz [1]. The amplitude of a wave is measured with reference to the ECG baseline level, commonly defined by the Iso-electric line which immediately come first the QRS complex. The human heart consist of four chambers two Atria called upper chambers and two ventricles called lower chambers. Normally the heart begins at the right atrium called sinus artia (SA) node and a special group of cells transmits electrical signal across the heart. The standard ECG waveform for one cardiac cycle in figure 1 as shown below :

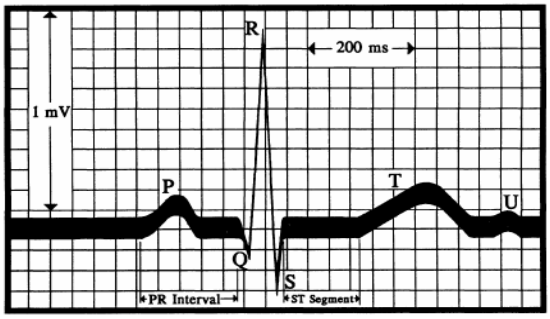

Figure 1 one cardiac cycle of ECG signal

II. METHODOLOGY

LABVIEW is more effective and easy to use because signal processing related toolkits can provide an efficient environment and tools for ECG signal analysis.

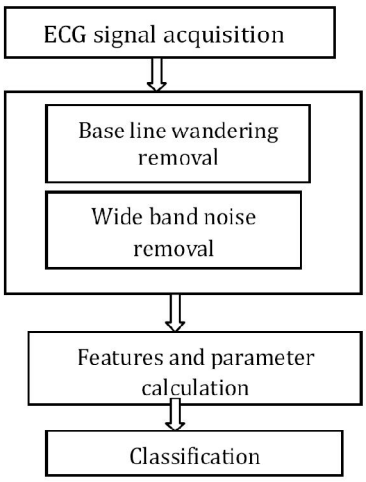

Figure 2. Steps of ECG signal analysis

In these paper we work on five different phase which has been shown by flowchart of general steps of ECG signals in figure 2.

In above flow chart firstly, ECG signal is acquire then pre-processing has been done by removing base line wandering and wide band noise , After that extracting the features from the denoise the ECG signal and at last calculate the each parameters of ECG signal.

ECG SIGNAL ACQUISITION

Generally, ECG signal is acquired from MIT-BIH data base or from www.physionet.org. Physionet>>physiobank>>physiobankATM>> MIT-BIH Data base. The acquisition of ECG signal using LABVIEW [2] shown in figure 3.

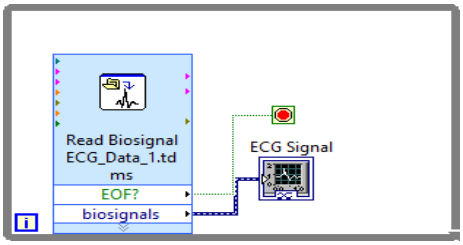

Figure3. Acquiring ECG signal

ECG signal Pre Processing

Generally, the recorded ECG signal is frequently contaminated by the noise and other artifacts which destroy the useful information (normally frequency components) from signals. Pre-Processing of ECG signals helps us to remove this contaminated from the ECG signal such as :

1. Base line wandering .
2. Wide band noise.
3. Power line interference
4. Electromyographic (EMG) noise
5. Electrode pop noise
6. Patient-electrode motion noise

Among of all these noises the baseline wandering and power line interference can strongly affect the ECG signal analysis. The following methods can be used to remove these noises .

1. Removing Baseline Wandering: It usually comes from respiration at frequencies wandering between 0.15 to 0.3 Hz. There are two different methods to remove this type of methods: Digital high pass filter and Wavelet transform.

In our work Wavelet transform are used to reduced the low frequency trend of signal as WA de-trend VI are using in it, after removing baseline wandering the ECG signal get more stationary signal [3].

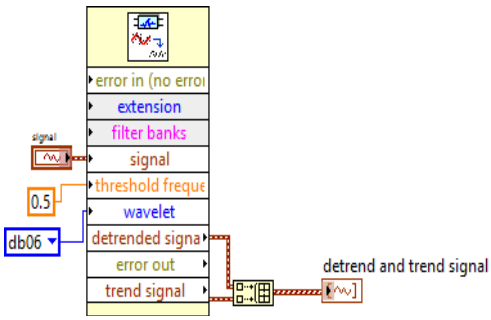

Figure 4 Base line wandering removal using WA de-trend express VI

Therefore, Trend signal is estimated by using following formulae:

$$\text{Trend level} = \log2(2*T)/\log2(N)$$

Where T is the sampling duration and N is the no of sampling points in raw ECG signal, we use 60 sampling duration and 12000 sampling points in total so that the trend level of threshold frequency is of 0.5 [4].

2. Wide band noise: After removing the base line wandering the resulting ECG signal is become stationary as compared to the raw ECG signal. Following techniques are used to remove the noisy signal or wide band noise but we were use only two technique to get the signal noise free as discussed below:

A) Wavelet De-noise.
B) Wavelet Packets.

A) Wavelet De-noise: ECG signal are stained with noise which make unproper diagnosis to determine any type of diseases. This types of noise could not be removed by traditional filters so Wavelet De-noise Express VI is used to decompose the ECG signal. Firstly, These signals are divided into several sub-band which depends upon the wavelet level as u give to your signal then it modify each coefficients of wavelet by applying soft threshold function, single level with db06 wavelet. Undecimated Wavelet transform (UWT) gives better results as compared to FFT or DWT which is also used to remove the wideband signal [5,6].

The typical shape of recording electrical activity of heart is well known to cardiologistic. Any significant derivation from that shape is usually considered to be a symtoms of a pathological condition. A pathological condition can sometime be diagnosed more easily when frequency content of the signal analysed. So Wavelet de-noise is used for this purpose.

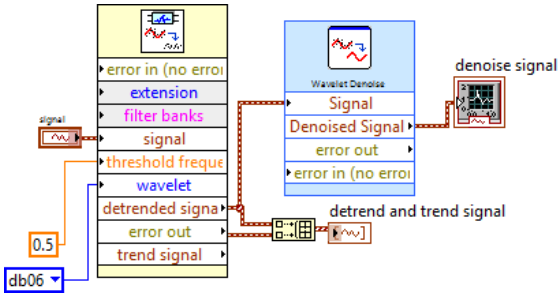

Figure 5 Denoising the ECG signal using Wavelet De-noise

Figure 6 shows setting of wavelet denoise in which transform type = UWT; levels = 8; wavelet db06 ; soft thresholding is used to show every single points and threshoding level= single .

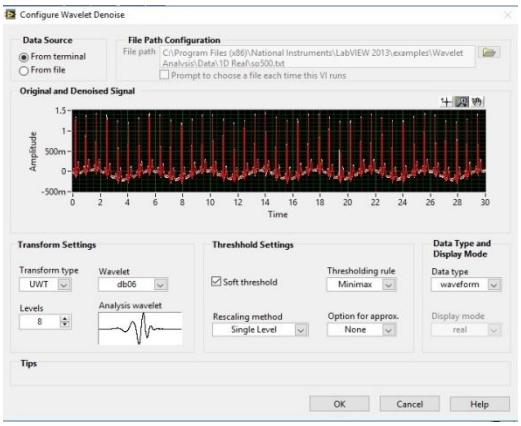

Figure 6. Wavelet transform EXPRESS VI for denoise the ECG signals

B) Wavelet Packets: It specifies the wavelet type with discrete wavelet transform analysis and Undecimated wavelet transform for denoising the signal. The wavelet packets are generalization of wavelet transform that allow for arbitrary tree-shaped band pass filtering. A set of detail and approximation components of signal is called wavelet packets decomposition tree. In order to apply wavelet packet analysis let us define the scaling function $Wo(t) = \phi\,(t)$
and the wavelet function $W_1(t) = \varphi(t)$.

Then it can be written functions $Wm(t), m = 0,1,2 \ldots$., as

$$W_{2m}(t) = 2\sum_{n=0}^{2N-1} h(n)\, Wm(2t-n) \qquad \text{i}$$

$$W_{2m+1}(t) = 2\sum_{n=0}^{2N-1} g(n)\, Wm(2t-n) \qquad \text{ii}$$

Equation i and ii are analysis functions called wavelet packet atoms [7,8].

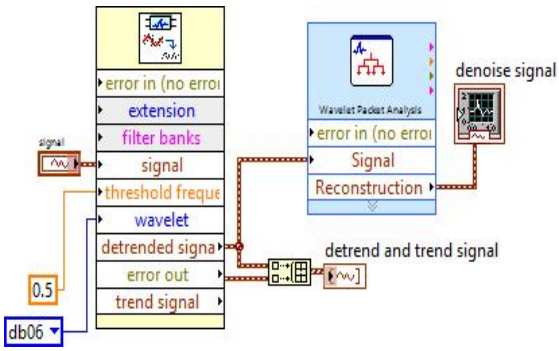

Figure 7 Denoise of ECG signal using wavelet packet

In figure below shows the setting regarding technique wavelet type is wavelet packet ; level is 4; Entropy type is threshold ; optimal parameter = 0.5 .

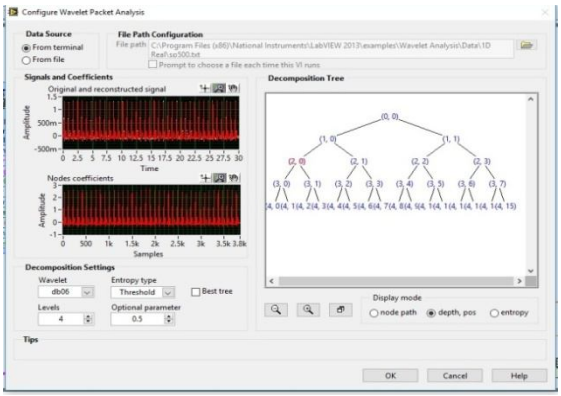

Figure 8 Denoise of the ECG signals using wavelet packet.

Features Extraction and ECG Parameter Calculation

Features information of ECG signal helps in diagnosis of cardiac diseases. We frequently need to extract many features from the pre-processed or denoised ECG signal for the diagnosis purposes it includes P onset, P offset, QRS onset, QRS offset, T onset, T offset after that we calculate the ECG parameters such as heart rate, PR interval, ST level, QRS amplitude, QRS intervals, ISO level etc.

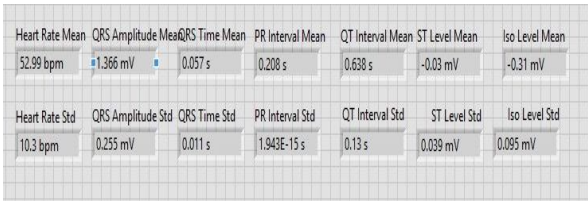

Figure 9 Parameters of ECG signals

Above figure calculate each Parameters of ECG signal includes as Heart Rate mean , Heart rate std , QRS amplitude mean ,QRS amplitude std, QRS Time mean , QRS Time std, PR interval mean , PR interval std, QT interval mean , QT interval std, ST level mean , ST level std, Iso level mean, Iso level std. as shown in table 1

Often times, feature extraction of ECG gives a proper diagnosis of cardiac problem and its help to identify the condition of patient . The results of decomposed signal will show the important details and approximation coefficients, which represents the original signal.

Table 1 ECG parameters and their normal values

Parameter	Normal value	Remarks
Heart rate (HR)	60-100 bpm	Atria and ventricular fibrillation causes stroke and heart quivers leading to sudden death of person
QRS Complex	Amplitude: 1.60± 0.5 mV interval: 100± 20 ms	Associated with ventricular contraction
PR interval	Interval :120-200 ms	Time taken by the electrical signal to travel from atria to ventricle
QT interval	Interval : 350-440 ms	QT depends on heart rate at from clinical relevance the corrected parameter QT_C is used .
ST interval	Period : 80-120 ms	Represents state of ventricular depolarization .

CLASSIFICATION OF ECG SIGNAL

After calculate the ECG parameters we will classify the disease based on interval and feature extraction to describe the ECG signal with P-QRS-T wave and its interval. There are different types of heart disease are shown in table 2.

Table 2 Classification of heart disease

Heart rate(HR) bpm	**Disease**
60-100 bpm	Normal value
<60 bpm	Bradicardiac arrhythmia
>100 bpm	Tachycardiac arrhythmia
PR or PQ interval	**Disease**
>200 ms	First degree of heart block
<120 ms	Early activation of ventricles variable gives information about heart block

III. EXPERIMENTAL RESULTS

Simulation is done by using LABVIEW biomedical toolkit where each and every components are describe and explained in proper way. Each parts of simulation model are available easily in LABVIEW

VI so that we can add, remove and replace with another one. After acquiring the raw ECG signal from MIT-BIH database [13] then the raw signal which is contaminated by noise is going to de-trend and trend level for boost the signal from zero value (baseline) and that variation between baseline and staring of raw signal is called Baseline wandering. This type of noise is removed by Wavelet De-trend VI. Thresholding value is depends upon the sampling points , time in sec of original ECG signal, technique is applied directly by right click on wavelet type options are available [11].

After De-trend the noisy signal, wavelet de-noise is done by applying directly from tool kit of labview in which signal processing tool shows different types of wavelet you can apply any one wavelet transform from wavelet families. Denoising of continued signal is now clear the noise which is easily shown on figure is called power line interference. Generally, PI interference is arise power line disturbance during real time ECG signal attain. Now features extract of signal with the help of array create on front panel.

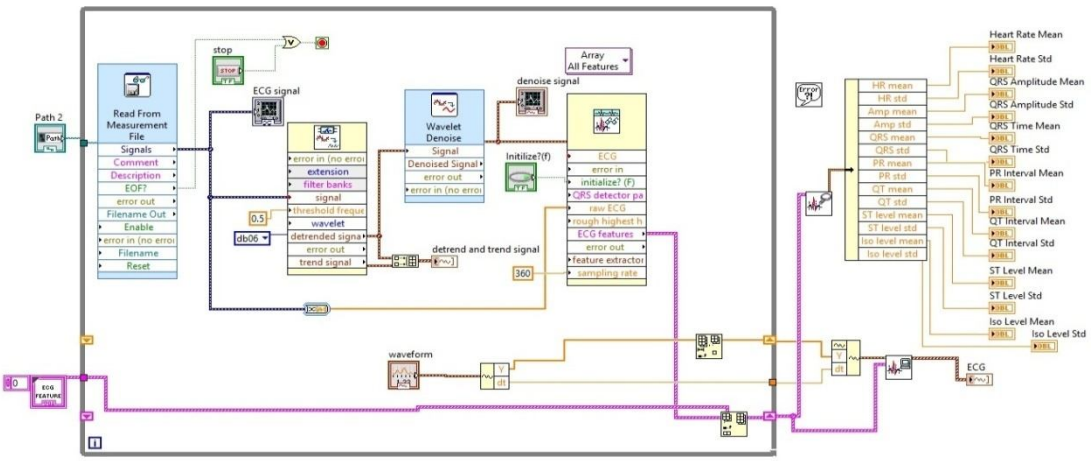

Figure10. Simulation model of ECG signal analysis.

Wavelet concept: Wavelet are being useful in various fields of science and engineering such as signal and medical imaging processing , signal processing etc. The wavelet transform gives a large numbers of small coefficients and a small number of large coefficients. Small coefficients mainly represent the noise components and large coefficients represent the signal values of raw signal. Following characteristic which make them useful are given:

- Wavelet are localized in time and frequency domain.
- For analysis non-stationary signal such as ECG, EEG etc.
- Wavelet separates a signal into multi-resolution components [14] .

Results: The simulation result and performance of ECG parameters and classification was trained in combination of wavelet transform with soft threshold on 8 level wavelet coefficients . The sampling frequency of the ECG signal is 360 Hz. Figure 11 shows the raw of ECG signal which is contaminated with noise , figure 12 tells us baseline wandering is removed with De-trend of Wavelet to smooth the signal from any noise , figure 13 explains power line interference of noisy ECG signal with Wavelet de-noise Express VI waveform to get the proper diagnosis.

Figure11 Raw ECG signal infected with noise

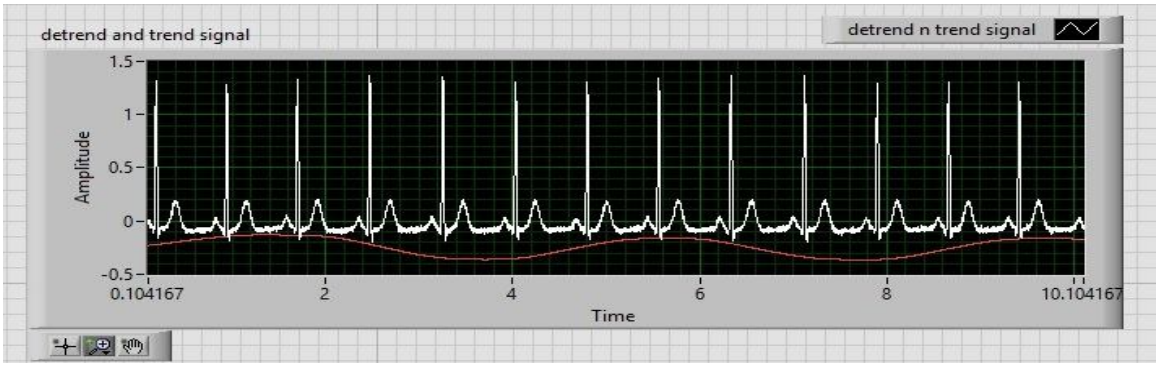

Figure 12 Baseline wandering removed by Wavelet Denoise VI

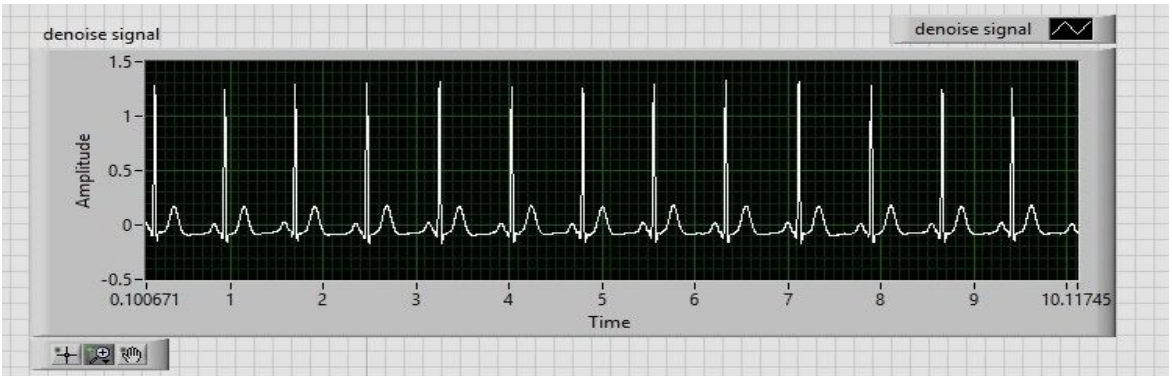

Figure13 Simulation results with maximum de-noise by UWT

CONCLUSION

In this paper, a Simulation model of ECG signal are often corrupted by power line interference and baseline wandering noise that need to be removal before processed of ECG signal can be used to doctor for analysis of disease. The processed system are of two types: features extraction phase and classification phase. In the first phase, moving average filters is employed to eliminate the baseline noise from the ECG signals. Then the UWT is applied on filtered signal and some features from wavelet are extracted. The simulation results demonstrated the processed system could be employed for the classification and parameters of noised signal.

REFERENCES

[1] Rangayyan R.M., Biomedical Signal Analysis, Wiley-Intersciene, John Wiley & SONS, INC., 2002.

[2] Lina Zhang, Xinhua Jiang, “Acquisition and Analysis System of the ECG Signal Based on LabVIEW”, The Ninth International Conference on Electronic Measurement & Instruments ICEMI’2009.

[3] Donghui Zhang, “Wavelet Approach for ECG Baseline Wander Correction and Noise Reduction”, Proceedings of the 2005 IEEE Engineering in Medicine and Biology 27th Annual Conference Shanghai, China, September 1-4, 2005.

[4] Channappa Bhyri, Satish T Hamde, Laxman M Waghmare,”ECG Acquisition and Analysis System for Diagnosis of Heart Diseases”,Sensors and Transducer Journal,vol.133, Issue 10, October 2011.

[5] DL Donoho, "De-Noising by Soft-Thresholding," IEEE Transactions on Information Theory, Vol. 41, pp. 613-27, 1995.

[6] Khalifa Elmansouri, R. Latif, B. Nassiri and S. Elouaham,” New Electrocardiogram Signal Analysis in a Research Laboratory Using LabVIEW”, International Journal of Interdisciplinary Research and Innovations (IJIRI), Vol. 1, Issue 1, pp: (15-21), Month: October-December 2013

[7] P.E. Tikkanen, “Nonlinear wavelet and wavelet packet denoising of electrocardiogram signal,” Biol. Cybern. Vol.80, 1999, pp.259-267.

[8] R. R. Coifman and Y. Meyer, “Orthonormal wave packet bases,” Math. Dept., Yale Univ., New Haven, CT, Tech. Rep., 1990.

[9] S. Mahmoodabadi, A. Ahmadian, and M. Abolhasani, "ECG feature extraction using Daubechies wavelets," in Proceedings of the fifth IASTED International

[10] Goutam Kumar Sahoo, Samit Ari,Sarat Kumar Patra,” ECG signal analysis for detection of Heart Rate and Ischemic Episodes” International Journal of Advanced Computer Research (ISSN (print): 2249-7277 ISSN (online): 2277-7970) Volume-3 Number-1 Issue-8 March-2013.

[11] Akshu Purohit, Khalid Khan, Govind Kishan Bohra,” Calculate ECG Parameters through Labview”, National Conference on Innovations and Recent Trends in Engineering and Technology (NCIRET-2014)

[12] National instrument LABVIEW ECG signal processing.

[13] www.physionet.org

[14] Nagendra H, S.Mukherjee, Vinod Kumar” Application of wavelet techniques in ECG signal processing”, IJEST journal of research,vol.3 no.10 October 2011.

★★★