COMPARATIVE STUDY AND SIMULATION OF DIFFERENT MPPT TECHNIQUES FOR PHOTOVOLTAIC SYSTEM

[1]PRAVIN Y. LUTE, [2]RAJAT S. ZADE, [3]SNEHA K. KHODKE, [4]RASHMI U. LOHKARE, [5]MRUDANI J. WAKHARE

[1,2,3,4,5]Electrical Engineering, DMIETR, Nagpur University, WARDHA- 442001, Maharashtra, India
E-mail: [1]pravinlute55@gmail.com, [2]rajatzade77@gmail.com

Abstract— Photovoltaic panel is the system which converts solar radiant energy into electrical energy by connecting the solar cell in series and parallel fashion. That converted energy is not constant during the whole day because of change in temperature and irradiance because of climate change and other environmental factors. To avoiding this problem MPPT technique is used which tracks the maximum power point to generate maximum power from the array input. A number of algorithms have been developed for extracting maximum power. This paper details P&O and INC algorithm techniques. And it can be experimentally verified by modeling the PV system with MPPT algorithm in Matlab/Simulink Software.

Keywords— Photovoltaic (PV), Maximum power point tracking (MPPT), Incremental conductance (INC), Perturb and observe (P&O), Maximum power point (MPP).

I. INTRODUCTION

Solar energy is one of the non-convectional energy which is renewed automatically and available at free of cost. As the solar energy is non-convectional and large amount of availability without pollution, the making PV technology is a popular research topic. Due to large amount of combustion of fossil fuels for generating electricity, the quantity green house gases in atmosphere is increases up to 17% from year 2004-2014. Oil reserves would have been exhausted by 2040, natural gas by 2060, and coal by 2300. Currently more research works has been focused on how to generate more power from the PV cells. There are two ways such as solar tracking system and Maximum Power Point Tracking (MPPT). In the survey, the maximum energy extracted from the sun without MPPT is only about 30-40 %. The state of the art techniques to track the maximum available output power of PV systems are called the maximum-power point tracking (MPPT). MPPT is usually used as online control strategy to track the maximum output power from photovoltaic panel. There are many techniques have been developed to implement MPPT, these techniques are different in their efficiency, speed, hardware implementation, cost, popularity. In this paper only two techniques are studied and results of that algorithm are observed which are P&O and INC. The overall block diagram of PV panel with Dc-Dc converter and MPPT is shown in this figure 1.

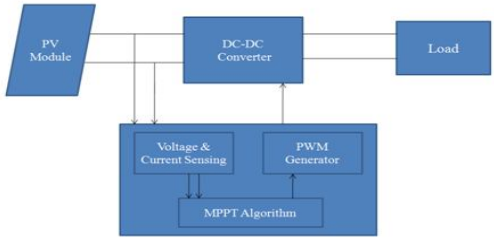

Fig 1. Layout of the implemented system

II. MODELING OF PV CELL

The solar cell is the basic unit of a PV system. An individual solar cell produces direct current and power typically between 1 and 2 W, hardly enough to power most applications. Solar Cell or Photovoltaic (PV) cell is a device that is made up of semiconductor materials such as silicon, gallium arsenide and cadmium telluride, etc. that converts sunlight directly into electricity. The voltage of a solar cell does not depend on solar irradiance but it is depend upon temperature of solar cell. The voltage in PV module is generated by connecting the PV cells in series and these series cells are connected in parallel for generating current. When solar cells absorb sunlight, free electrons and holes are exited and travels from negative to positive junction and positive to negative junction respectively. If the positive and negative junctions of solar cell are connected to DC electrical equipment, current is delivered to operate the electrical equipment. The equivalent circuit of the PV cell is shown in figure.

III. PERTURB AND OBSERVE MPPT ALGORITHM

The algorithm involves introducing a perturbation in the panel operating voltage. Modifying the panel voltage is done by modifying the converter duty cycle.

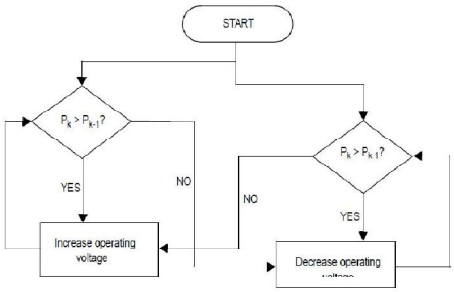

Fig 2. Algorithm of P&O MPPT

IV. INCREMENTAL CONDUCTANCE MPPT ALGORITHM

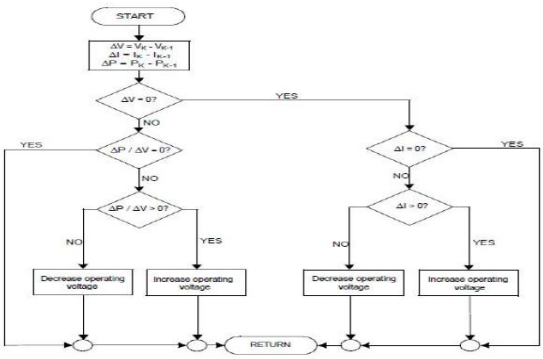

Fig 3. Algorithm of INC MPPT

V. SIMULATION AND RESULTS

5.1 Perturb and Observe

Fig 4 shows the simulation of P&O MPPT. The modeling diagram of figure represents the whole PV system with MPPT along with the boost converter has been implemented in the Matlab/ simulink.

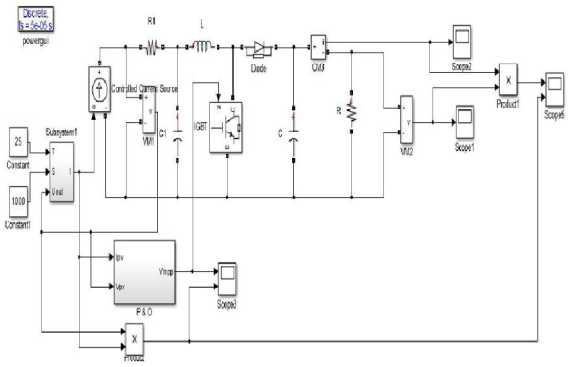

Fig 4. Simulation of P&O

Table 1 shows the output voltage of P&O MPPT along with different irradiation and temperature.

Table 1. Output voltage of P&O

Solar Irradiance W/m^2	MPPT Output Voltage (P&O)				
	25^0 C	30^0 C	35^0 C	40^0 C	45^0 C
600	16.8	16.7	16.6	16.5	16.4
750	16	15.8	15.5	15.2	15.2
1000	13	13	13	12.8	12.7
1250	11	10.5	10.2	10	9.9

5.2 Incremental Conductance

Fig 5 shows the simulation of INC MPPT. The modeling diagram of figure represents the whole PV system with MPPT along with the boost converter has been implemented in the Matlab/ simulink.

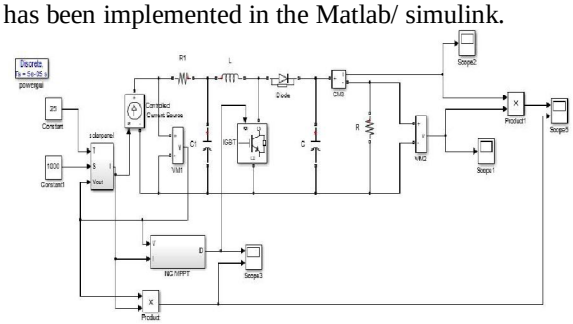

Fig 5. Simulation of INC

Table 2 shows the output voltage of INC MPPT along with different irradiation and temperature.

Table 2. Output voltage of INC

Solar Irradiance W/m^2	MPPT Output Voltage (INC)				
	25^0 C	30^0 C	35^0 C	40^0 C	45^0 C
600	8	7.9	8	8	8
750	9.5	9.5	9.5	9.4	9.4
1000	12	11.5	11.5	11.5	11.5
1250	13.5	13.4	13.4	13.4	13.3

CONCLUSION

The results of the analysis have shown that the tracking performances of *P&O* and *INC* are largely identical under both static and dynamic conditions. They both are based on the same mathematical relation of the derivative of power with voltage, and it has been shown that the only difference between them is that the *INC* neglects the second-order term in the discrete differentiation of the power.

REFERENCES

[1] Ling Lu, Ping Lu, "Research and simmulation of photovoltaic power system maximum power control", *IEEE, Threegeorge university, china,2011.*

[2] N.Pandiarajan and Ranganath Muthu, "Mathematical Modeling of Photovoltaic Module With Simulink", *IEEE, SSN College Of Engineering Kalavakkam, Tamilnadu, India 2011.*

[3] Yongheng Yang, Huai Wang, Frede Blaabjerg & Tamas Kerekes, "A Hybrid Power Control Concept for PV Inverters With Reduced Thermal Loading", *IEEE, transactions on power electronics, vol. 29, no. 12, december 2014.*

[4] Bikram Das, Anindita Jamatia, Abanishwar Chakraborti, Prabir Rn.Kasari & Manik Bhowmik," New Perturb And Observe Mppt Algorithm And Its Validation Using Data From Pv Module", *IJAET, July 2012.*

[5] Saravana Selvan. D, "Modeling And Simulation Of Incremental Conductance MPPT Algorithm For Photovoltaic Applications",*IJSET, 1 July 2013.*

★★★