INTELLIGENT RAILWAY CRACK INSPECTION ROBOT

[1]TINKU SUSAN KORAH, [2]NEETHU P, [3]ROSY ELIZABETH SEBASTIAN, [4]NAVYA ROSE JOSEPH, [5]ROSAMMA SEBASTIAN

[1,2,3,4]UG Scholar, [5]Assistant Professor, Dept. of ECE,
Amal Jyothi College of Engineering, Kottayam, Kerala, India
E-mail: [1]tinkususan@gmail.com

Abstract— Intelligent Railway Crack Inspection is dedicated as a measure of railway safety. This system uses the principle of Infrared rays (IR rays). It consists of an IR transmitter and receiver. Two key technologies which are necessary in this system are detection and image processing. The defect information can be wirelessly transferred to railway safety management centre using a GSM module and it includes defect level and location information which is acquired by embedded GPS receiver. The power required for the entire system is obtained by means of solar energy. The Railway Safety Management Centre analyses the defect information and provides an alert to the next approaching train. Thus train derailment can be avoided and chance of loss of human life and economy can be minimized.

Keywords — Railway Cracks, IR Transmitter-Receiver Assembly, GSM, GPS, Robot, Zigbee Solar Panel.

I. INTRODUCTION

In today's world, transport is a key necessity because in its absence it would be impossible for products to be consumed in areas which are not in the immediate vicinity of the production centres. Throughout history, transport has been a necessity for the expansion of trade. Economic prosperity can be achieved by increasing the rationality and capacity of transport systems. The proper operation and maintenance of transport infrastructure has a great impact on the economy. Transport, being one of the biggest drainers of energy, its sustainability and safety are issues of paramount importance.

For millions of people across the world railways are the prime mode of transportation. Safety is one of the key issues for railway transportation. Due to the heavy duty of the train transportations, train accidents happen every year in the world, and results in serious destruction of property and injury or death of passengers and crew members. Among all factors of rail accident, the rail defect is one of the most critical problems which cause train derailment. Therefore it is vital to monitor the rail crack continuously. In India, rail transport occupies a prominent position in quenching the ever burgeoning needs of a rapidly growing economy. However, in terms of the reliability and safety parameters, global standards have not yet been truly reached.

With the advent of powerful digital signal processors, Image Processing techniques have been explored to formulate solutions to the problem of railway crack detection[5]. Though it provides good accuracy, this method uses techniques like image segmentation, morphology and edge detection all of which take a lot of processing power and an extreme amount of time rendering the robot slow and thereby unsuitable. Eddy current based methods are used to tide over limitations associated with Ultrasonic and microwave techniques[4]. However they have the problem of very slow overall speed which reduces the usability of the same.

The electromagnetic tomography is the latest technology proposed by scientists. It can acquire the defect shape and position information. The sensor and signal processing hardware of the electromagnetic tomography rail defect inspection system can be installed on the common passenger or freight train[3]. This solution can make the inspection conducting almost all the time and therefore reduce the critical accident caused by rail defect. But survey shows that the output given by the sensor is very low, which is not sufficient for the railway crack detection.

Thus we adopted a new method which proposes a cheap, novel yet simple scheme with sufficient ruggedness suitable to the Indian scenario that uses an IR Transmitter Receiver arrangement to detect the crack in railway lines, which proves to be cost effective. The intensity of the crack can be measured using image processing techniques. The paper also presents the details of the implementation results of the intelligent railway crack inspection system using simple components inclusive of a GPS module[6], GSM Modem, Zigbee module and IR based crack detector assembly. This paper is organized as follows: Section II discusses the Principle of IR railway crack defect inspection, Section III deals with the experimental rail defect reconstruction. Section IV elaborates the results and discussion and Section V discusses the conclusion.

II. PRINCIPLE OF INTELLIGENT RAILWAY CRACK INSPECTION

A. Principle of IR Sensor

Infrared transmitter is one type of LED which emits infrared rays generally called as IR Transmitter. Similarly IR receiver is used to receive the IR rays transmitted by the IR transmitter. Both IR transmitter and receiver should be placed adjacent to each other[1]. The signal is given to IR transmitter,

whenever the signal is high, the IR transmitter LED is conducting, it passes the IR rays to the receiver. The IR receiver is connected to a comparator[2]. The comparator is constructed with LM 358 operational amplifier. In the comparator circuit the reference voltage is given to non inverting input terminal. The inverting input terminal is connected to IR receiver. When the IR rays between the IR transmitter and receiver is interrupted, the IR receiver will not conduct. So the Non inverting input terminal voltage of the comparator is lower than inverting input. Now the comparator output is in the range of 0V. This voltage is given to microcontroller and LED will turn OFF. When IR transmitter passes the rays to receiver, the IR receiver is conducting. Due to that non inverting input voltage is higher than inverting input. Now the comparator output is +5 Volts so the output is given to microcontroller so LED will glow.

B. Design of intelligent railway crack defect inspection

The proposed system consists of mainly three components that are Micro-controller, IR module and Zigbee module. IR sensor is used to detect the crack in railway track. Infrared (IR) transmitter is one type of LED which emits infrared rays generally called as IR Transmitter. The transmitted light rays are received by IR receiver on adjacent side[1]. IR transmitter and receiver should be kept parallel and adjacent to each other so that transmitted light can fall on receiver straight. Then the LCD display is used to view the result.

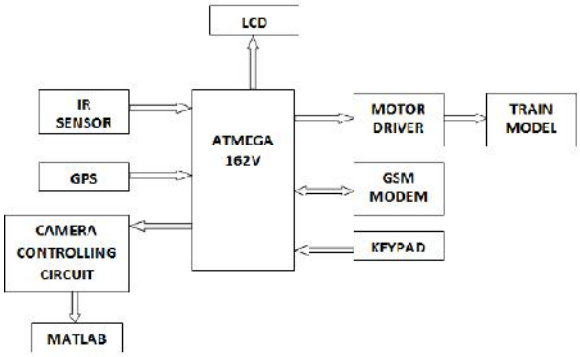

Fig. 1 Block Diagram of Intelligent Railway Crack Inspection Robot

C. Mechanical Design

For crack detection purpose, a moving vehicle is designed. Vehicle is driven using four wheels using two DC motors. DC motors are operated on 12 volt supply. Power supply is given provision to use either battery power or the power using Solar Energy[6]. IR transmitter and receiver are used for crack detection. Proposed system consists of a robot vehicle varying load of a battery weighing 150 grams. Vehicle uses DC motors having 120 RPM. Vehicle is supposed to roll up over track using DC motors. Vehicle will also carry total PCB load, solar panel and wires mounted on it. The robot runs on both the railway tracks simultaneously. This increases its stability preventing it from falling when it moves over a railway bifurcation.

D. Components Required

Major hardware components are listed below which will perform crucial role in proposed system. Global System for Mobile Communication (GSM), Infrared Sensors, Motor, microcontroller, Global Positioning System (GPS), Zigbee, constitutes major components in proposed system.

i. GSM

GSM module is used to communicate the fault detected by system[6]. GSM uses long range and hence message can be sent through longer distance easily rather than using costly data packs. GSM is used to send the message to mobile phone.

ii. IR MODULE

IR module contains IR transmitter and receiver. This module works on the principle of light theory.IR transmitter and receiver are placed adjacent to each other.

iii. ATMEGA162V

The ATmega162 is a low-power CMOS 8-bit microcontroller based on the AVR enhanced RISC architecture. By executing powerful instructions in a single clock cycle, the ATmega162 achieves throughputs approaching 1 MIPS per MHz allowing the system designed to optimize power consumption versus processing speed.

iv. MOTORS

Relay motors are used to drive the mechanical robot. Proposed design uses 4 DC motors. Motors are programmed to move forward and reverse directions. DC motors are geared and have almost same internal structure. 12 volt external power supply is given to both motors for operating smoothly.

v. GPS

The Global Positioning System (GPS) is a space-based navigation system that provides location and time information in all weather conditions, anywhere on or near the Earth where there is an unobstructed line of sight to four or more GPS satellites.

vi. Zigbee

Zigbee's low power consumption limits transmission distances to 10–100 meters line-of-sight, depending on power output and environmental characteristics. ZigBee devices can transmit data over long distances by passing data through a mesh network of intermediate devices to reach more distant ones.

III. EXPERIMENTAL RAIL DEFECT RECONSTRUCTION

Simulation of rail defect reconstruction is done to verify the feasibility of intelligent railway crack inspection. Intelligent Railway Crack Inspection is dedicated as a measure of railway safety. This system uses the principle of Infrared rays (IR rays). It consists of an IR transmitter and receiver.

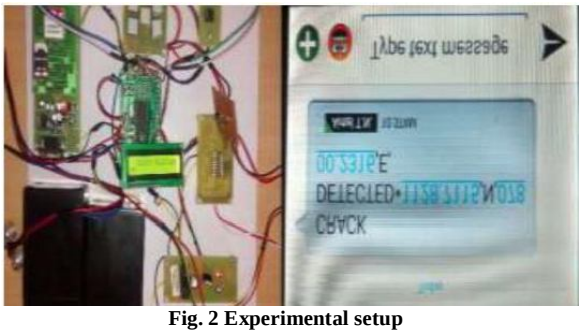

Fig. 2 Experimental setup

Two key technologies which are necessary in this system are crack detection and image processing[5]. The defect information can be wirelessly transferred to railway safety management centre using a GSM module and it includes defect level and location information which is acquired by embedded GPS receiver[6]. The power required for the entire system is obtained by means of solar energy. The Railway Safety Management Centre analyses the defect information and provides an alert to the next approaching train using Zigbee module[5]. Thus train derailment can be avoided and chance of loss of human life and economy can be minimized.

IV. RESULT AND DISCUSSION

The sensors sense the crack and send the information to the microcontroller, where it responds and gives the command to the particular component with predefined algorithm, the time parameters are crucial which can be easily changed and modified using microcontrollers. Thus, this device would help to reduce the train collisions. In order to detect the current location of the device in case of detection of a crack, a GPS receiver whose function is to receive the current latitude and longitude data is used. To communicate the received information, a GSM modem has been utilized. The
function of the GSM module being used is to send the current latitude and longitude data to the relevant authority as an SMS.

Fig.3.a Input Image

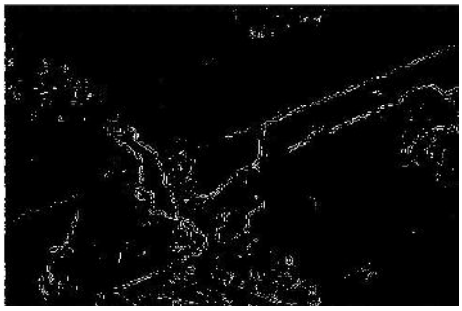

Fig .3.b Railway Crack after Image Processing
Fig. 3 Detected MATLAB image

CONCLUSION

Intelligent railway crack inspection robot is an eminent way to detect the crack in the railway track. It detects the crack based on the principle of IR Transmitter and Receiver. The defect information which includes GPS value is wirelessly transmitted to the railway safety management centre through GSM Module and the alert can be given to the next approaching train.
The proposed scheme possesses many advantages such as fast monitoring and reporting system, low cost, low power consumption and less analysis time. Also the easy availability of the components make an ideal project for industrial use with very little initial investment. So the current location device on rail track can easily be measured from home station. By this proposed model many lives can be saved by avoiding accidents. The idea can be implemented in large scale in the long run to facilitate better safety standards for rail tracks and provide effective testing infrastructure for achieving better results in the future.

REFERENCES

[1] V.Muralidharan,V.Dinesh, P.Manikandan, “An Enhanced Crack Detection System for Railway Track”, March 2015
[2] Selvamraju Somalraju, Vigneshwar Murali, Gourav Saha, Dr. V. Vaidehi, “Robust Railway Crack Detection Scheme (RRCDS) Using LED-LDR Assembly”, IEEE 2012.
[3] Ze Liu, Wen Li, Fangqi Xue, Junyan Xiafang, Bin Bu, and Zheng Yi, “Electromagnetic Tomography Rail Defect Inspection”, IEEE 2015
[4] Prof. P. Navaraja, ”Crack detection system for railway track by using ultrasonic and PIR sensor”, May 2014.
[5] Rafael C. Gonzalez, “Digital Image Processing Second Ed., Pearson Education”, 2004.
[6] Randhir Swapnil Kishore,Ippar Umesh L,Jethwani AmitB,Athul V.Dusane, “Rail crack detection system using IR module”, 2015.

★★★