THE SELF-TUNING FILTERS A REVIEW ON ADAPTIVE ANALOG FILTERS

[1]VIPUL VERMA, [2]RISHABH SAXENA, [3]PRAGYA NEWATIA, [4]PUJYA PANDEY

[1,2,3,4]JSS Academy of Technical Education Noida, India
Email: vipulverma313@gmail.com, saxena.rishabh84@gmail.com, pragya26994@gmail.com, pujya906@gmail.com

Abstract- Filters have always been indispensable when it comes to Signal Processing, may it be analog signal processing or the digital signal processing. Analog signal processing has always been the superset of the digital signal processing. Later came the advent of digital systems. Even some of the pioneer digital filters relied on the techniques used for their analog parents. Still today, some digital filters depend on the simulation of analog filters in order to achieve from some of their interesting properties. Filters varying their resonant frequency in response to an input control voltage which is generated via analog multipliers or the phase detectors in a negative-feedback circuit are called-self tuning filters. They allow the automatic tuning of bandwidth, quality factor and center frequency.

Keywords- Resonant Frequency; Analog Multiplier; Phase Detectors; Voltage Controlled Filters; Bandwidth; Quality Factor.

I. INTRODUCTION

This paper presents a review on the analog self-tuning filters, from theoretical and practical perspectives. It covers both generalized predictive control implementations, the meta-analysis, along with the more general state-space representation of model predictive control and other more specialized types, such as linear model predictive control. This paper provides a detailed vision on the functioning of the self-tuned filters, the building blocks from which it is implemented and its real time applications in the industry and its future prospects in Electronic circuits. Self-tuned filters are a special case of analog filters in electronic circuits which pass the signals of desired frequency and block or to attenuate other frequencies or noise which is superimposed on the desired signal. For this sharp distinction, a filter is desired whose resonant frequency tracks the fundamental frequency of input signal. The overall setup compromises up of two main blocks namely A Voltage controlled Filter or VCF and a two quadrant Analog multiplier. The functionality of these blocks has been demonstrated in detail in the upcoming sections.

II. THE ANALOG MULTIPLIER

An analog multiplier is a device which takes two analog signals and produces an output which is their product [1].
Although analog multiplier circuits are very similar to operational amplifiers, they are far more susceptible to noise and offset voltage-related problems as these errors may become multiplied. When dealing with high frequency signals, phase-related problems may be quite complex. The peculiar fact about the analog multipliers is that the output of the multiplier depends on the phase difference between the two applied input signals, this property can be employed as a useful scheme to measure the phase difference between the two input signals and hence can be used as Phase Detector [2] (Fig. 1).

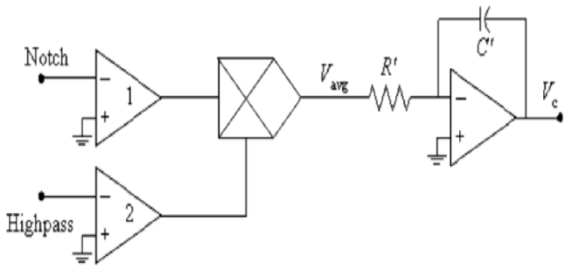

Fig. 1. Phase Detector Circuit used for Zero Tuning

Now if the input is as:

$$V_x = V_p \sin(\omega t)$$

$$V_y = V_p' \sin(\omega t + \emptyset)$$

Where $\emptyset$ the phase difference between the signals, the output will be:

$$V_\circ = \frac{V_P V_P'}{2V_r[\cos\emptyset - \cos(\omega t + \emptyset)]}$$

$$\text{At } \emptyset = 90°$$

$$V_{av} = 0$$

This information is used to automatically tune the voltage controlled filter at ω▪ where,

$$\omega_\circ = \frac{V_r}{V_c RC}$$

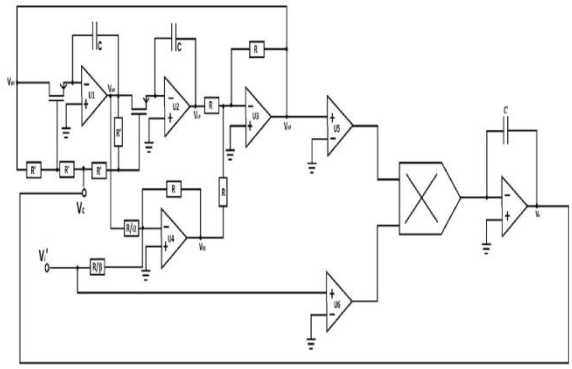

Fig.2. The Self-Tuned Filter Schematic

III. THE VOLTAGE CONTROLLED FILTER

The voltage controlled filters [3] are the special type of filters whose output can be controlled by the means of control voltage applied to controlled input. These circuits are basically derived from the universal active filters [4] consisting of the high pass filter, low pass filter, band pass filter and notch filter. The VCF can be derived from the circuit of universal active filter by replacing the fixed valued resistance of the integrators (band pass and low pass) with the voltage controlled resistance. Voltage controlled resistance can realized with the help of the MOSFET working in the triode region. The relationship between the control voltage applied at the gate of the MOSFET and the resistance between drain to source (Rds) can be given by:

$$R_{ds} = \frac{1}{k(V_c - 2V_t)}$$

Here we can clearly see that resistance inversely proportional to the applied voltage. Now since:

$$\omega_o = \frac{1}{R_{ds}C}$$

Hence the resonant frequency of the filter will be adjusted in accordance with the Rds which is proportional to the control voltage.

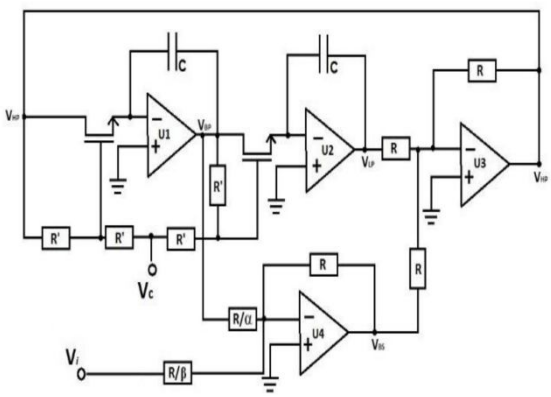

Fig.3. The Voltage Controlled Filter

IV. SELF-TUNING CIRCUIT

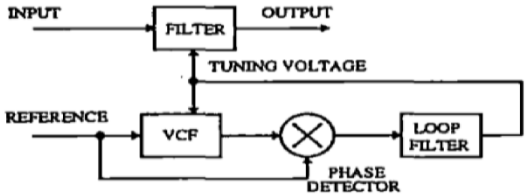

Fig.4. Block Diagram for the Self-Tuned Filter [5]

The self-tuned filter is made from the Universal Active Filter or the UAF [4] as one of its building blocks. The circuit diagram for it is shown in the Fig.3. The output of the operational amplifier U1 is a Band pass output which is integrated in the next stage to obtain the low pass output. The next operational amplifier U3 gives a high pass output as shown mathematically here. Connecting U4 operational amplifier as shown in the figure will give us a band stop output. The corresponding transfer functions obtained from the universal active filter depicted in the Fig. 3 are as the followings:

$$\frac{V_{HP}}{V_i} = \frac{(\frac{S}{\omega_o})^2\beta}{(\frac{S}{\omega_o})^2 + (\frac{S}{\omega_o})\alpha + 1} \quad (1)$$

$$\frac{V_{BP}}{V_i} = \frac{-(\frac{S}{\omega_o})\beta}{(\frac{S}{\omega_o})^2 + (\frac{S}{\omega_o})\alpha + 1} \quad (2)$$

$$\frac{V_{LP}}{V_i} = \frac{\beta}{(\frac{S}{\omega_o})^2 + \frac{S}{\omega_o}\alpha + 1} \quad (3)$$

$$\frac{V_{BS}}{V_i} = \frac{-\beta[\left(\frac{S}{\omega_o}\right)^2 + 1]}{(\frac{S}{\omega_o})^2 + \frac{S}{\omega_o}\alpha + 1} \quad (4)$$

Thus the overall setup as shown in Fig. 2 works as a universal active filter as any kind of the filter output can be obtained from the circuit. This circuit can be converted to a Voltage controlled filter by adding the multiplier block to the circuit as shown in the same figure. Now the overall setup works as a Voltage controlled Active Filter Controlled by the voltage Vc. Vc can be manually varied to obtain varying center frequency of the system. The output at point A gives the Average value at the capacitor load. This mechanism is made self-tuning by adding an Integrator in a negative feedback mode and by replacing the nMOS transistor by a pMOS in the linearized resistor circuits. The output of the integrator is then fed back again to the circuit as the control voltage Vc as shown. Thus now the system becomes a self-tuned filter. The multiplier circuit keeps checking that a constant phase difference of 90o is maintained between the input and the output.

Hence whenever there are variations in the input signal frequency, the output is self-adjusted to a frequency which is exactly 90o out of phase with the input signal. Hence we can say that the system automatically tunes itself to the incoming input signal frequency. This explains the working principle behind active the self-tuned filters.

A. Applications in the Field

The self-tuned filters (special case of UAFs) and the voltage controlled filters find wide range of applications in the field of Biomedical Sciences, Space signal identification, acoustic noise reduction, etc. It is used in the field of biomedical field for the removal of the particular frequency component. Suppose if want to remove the 200Hz frequency from the ECG waveform, it can be done by applying the waveform at the input voltage and taking the output at the output of notch filter. It is used in the identification of signals coming from the outer space. The self-tuned filters are made to scan the whole range of frequency and see whether any range of frequency get locked and once the frequency is locked it keep on tracking this frequency range and find if there is any useful information or not. The acoustic noise in the signal can be removed by adjusting the zero frequency of the notch filter .The zero frequency of the notch filter is adjusted with the help of control voltage. The zero frequency of the notch filter is related to control signal as:

$$\omega_z = \frac{V_c}{V_m}\omega_o$$

Where, Vm: Multiplier constant

Vc: Control voltage

ωo: Fundamental frequency of filter

V. CASE STUDIES

A. Self-tuned Jet engine module using Kalman Filter

A piecewise linear Kalman filter [7] can be used for self-tuning of an engine module (Fig. 5). The Kalman filter algorithm can be used to solve differences between theoretical and physics-based models and in the real-life actual engine hardware [8]. The two outputs of the self-tuning engine model, tuning parameters and the unknown parameter estimates, can be put to use for a variety of purposes. Estimates of these parameters, which could be employed in either ground-based or on-board solutions, could be used for performance analysis and assisting in current engine health management operations. Such information can be used for engine diagnosis to identify the reasons for the engine degradation and occurrence of faults. The estimated parameters, while useful for informational purposes alone, introduce the prospect of advanced parameter synthesis and control algorithms, including controlling the thrust directly. Efficiency gains can also be calculated by the accurate estimation of engine-specific operational limits, giving time to relax generally hard lined stall margins, critical temperature, thrust and the pressure limits.

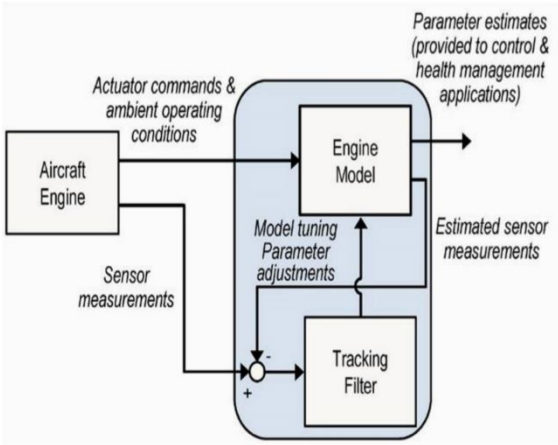

Fig.5. Self-tuning Aircraft engine model using Kalman Filter[8]

B. Active Noise Control(ANC) using Self-Tuned Filters

An analog electroacoustic circuit for active control of narrow-band low-frequency acoustic noise using adaptive filtering techniques was initiated by Kote Radhakrishnan Rao, presently working with Texas Instruments, Bangalore, India. The proposed circuit aims at producing antinoise, which is then acoustically added to the unwanted noise to produce an error signal which is then fed back to the circuit. The circuit is in a way, a modified Kerwin–Huelsman–Newcomb biquad filter that tunes itself to the incoming noise frequency using the zero tuning techniques. The circuit was implemented on a printed circuit board and was successful in reducing noise by 15–20 dB in open space. This ANC technique specifically for narrow-band noise cancellation using adaptive analog filters proved to be a better solution than its digital signal processing counterpart in speed, cost, and robustness [6][9]. The basic block diagram

for this implementation is shown in Fig. 6. The experimental results of active noise cancellation in open space at 800Hz is also shown in Fig. 7.

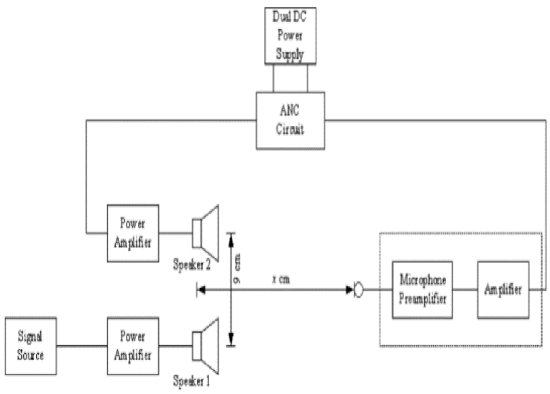

Fig.6 Experimental Setup for Active Noise Control [6]

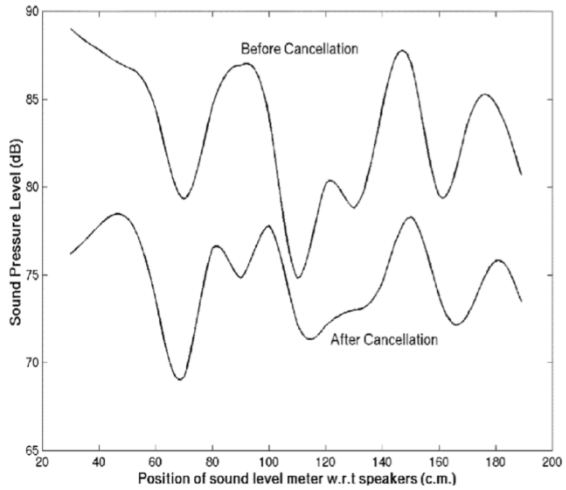

Fig.7. Acoustic Noise Cancellation at x=30cm at frequency of 800Hz

CONCLUSIONS

Even though self-tuning filters have numerous applications in almost every field of study. This technology can be applied in domestic and industrial sectors both to revolutionize signal processing. With advancements in new semiconductor technologies and microprocessor based intelligent systems, self-tuned filters have found its implementation in several fields of aerospace technology, biomedical engineering, scientific research technologies, etc. Even though this field has so many potential applications, its usage is limited to scientific applications only. These filters can be used greatly to reduce the noises in the analog and digital systems and lock on the required frequency information signals. Though there are some problems which are far from being solved. Noise performance characteristics in these systems are relatively better than their general counterparts. Microprocessor based digital self-tuning filters has revolutionized signal processing. Development of better algorithms and circuitry has endless possibilities and the potential to change the face of signal processing in the coming future.

REFERENCES

[1] Nandini A.S, Sowmya Madhavan and Dr Chirag Sharma "Design and Implementation of Analog Multiplier with Improved Linearity" International Journal of VLSI design & Communication Systems (VLSICS) Vol.3, No.5, October 2012 .

[2] Daniel B. Talbot "Frequency Acquisition Techniques for Phase Locked Loops" ISBN: 978-1-118-16810-3 September 2012, Wiley-IEEE Press.

[3] De Boo, et al. "Automatically Tuned Filter Uses IC Operational Amplifiers" EDN/EEE pp. 39-41, Feb.1972.

[4] S. M. Kuo and D. R. Morgan, "Active Noise Control Systems". New York: Wiley, 1996.

[5] V. Sridhar and K. R. Rao, "Active control of acoustic noise," in Proc. 21st National Systems Conf., Jan. 1997, pp. 23–28.

[6] Ankush Goel, Anoop Vetteth & Kote Radhakrishnan Rao "Active Cancellation of Acoustic Noise Using a Self-Tuned Filter", IEEE Transactions on Circuits and Systems—I: Regular Papers, Vol. 51, No. 11, November 2004

[7] Brown, R. G. and P. Y. C. Hwang. 1992. "Introduction to Random Signals and Applied Kalman Filtering", Second Edition, John Wiley & Sons, Inc.

[8] Jeffrey B. Armstrong Vantage and Donald L. Simon "Constructing an Efficient Self-Tuning Aircraft Engine Model for Control and Health Management Applications", 2012 Annual Conference Prognostics and Health, Minnesota, September 23–27, 2012, NASA/TM—2012-217806.

[9] S. M. Kuo and D. R. Morgan, "Active Noise Control Systems". New York: Wiley, 1996.

★★★