DESIGN OF PHYSICAL NETWORK TOPOLOGY FOR ZIGBEE (IEEE 802.15.4A) IN WPAN ENVIRONMENT USING MATLAB

ROUNAQ NAYAK

Btech 3rd yr (Electrical and Electronics Engineering),India
Veer Surendra Sai University of Technology, Burla, Sambalpur, Odisha, Pin-768018
E-mail: ronthedon986@gmail.com

Abstract- ZigBee standard consists of a whole suite of specifications designed specifically for wireless network edsensors and controllers. This project mainly focuses on development of MATLAB code for ZigBee Network Topology usingIEEE802.15.4. The work presented here is to show how we can implement ZigBeeNetworkTopology with its specifications by using MATLAB, simulating the working of a ZigBee network without using mathematical equations

Keywords- ZigBee, MATLAB, Sensors, Network

I. ZIGBEE

ZigBee is a low-cost,low-power, wireless mesh networking standard. First, the low cost allows the technology to be widely deployed in wireless control and monitoring applications. Second, the low power usage allows longer life with smaller batteries. Third, the mesh networking provides high reliability and more extensive range. ZigBee is a standard that defines a set of communication protocols for low data rate short range wireless networking. ZigBee is targeted mainly for battery power applications where low data rate,low cost and long battery life are main requirements.

The specifications of IEEE 802.15.4 are used to design transceivers for the applications which uses Zigbee technology. According to IEEE 802.15.4 following specifications are required.

Data rate:	250 kbps
Number of channels:	16
Operating Frequency:	2.4GHz
Channel Spacing:	5MHz
Spread spectrum:	DSSS
Chip rate:	2Mega chips per second
Modulation:	OQPSK with Half sine pulse shaping

Figure 1.1ZigBee Network

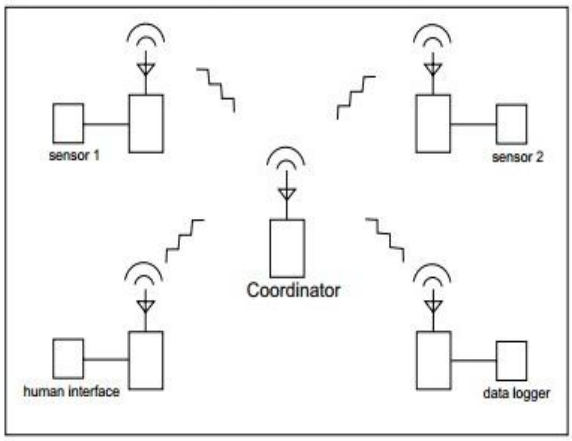

ZigBee and its underlying 802.15.4 standard provide networks with two kinds of devices-full function

devices(FFDs) and reduced function devices(RFDs).All must have 64-bit IEEE addresses, although short 16-bit addresses can be allocated to reduce packet size. FFDs may be network coordinators or routers, while the endpoint devices that interact with the physical world are the RFDs. All ZigBee networks must have a coordinator. The coordinator sets up the network, is aware of all its constituent nodes, handles and stores information, acts as a repository for security keys and manages the information transmitted and received within the network.Routers act as intermediaries, channeling information between devices. The endpoint devices have limited functionality in order to reduce system cost and complexity. They are also the cheapest devices to manufacture. They require limited memory and usually only interact with the physical world. They have just enough capability to talk to their parent nodes,be they the coordinator or routers. Although ZigBee supports several network topologies, the ZigBee Alliance states that the “core specification defines ZigBee’s smart, cost effective and energy efficient mesh network. It’s an innovative, self configuring, self healing system of redundant, low cost and very low–power nodes. In mesh networks each wireless node communicates with the one adjacent to it.Should one node fail, information is automatically rerouted to allow devices to go on communicating. This dynamic node link redundancy contributes to ZigBee’s low maintenance needs, reliability, and seeming “unstoppability”. Because of their rerouting capability, nodes on a ZigBeecan ‘walk through’ walls and even communicate with each other through a building floors. Furthermore, even when they cannot see each other, nodes are still able setup networks. The most common network configuration, however is probably the star topology. It is particularly useful when endpoint nodes are closely clustered and communicate with a single router node. This arrangement enables individual

client nodes to save battery power. ZigBee specifications also refer to the tree topology, where a single large network brings together several star networks.

II. VARIOUS NETWORK TOPOLOGIES

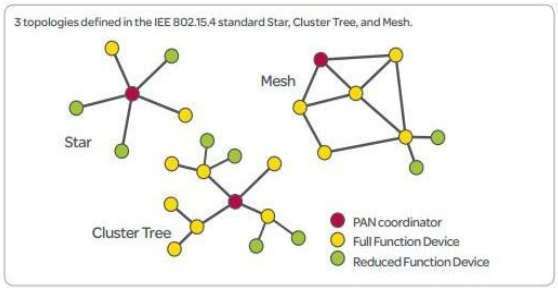

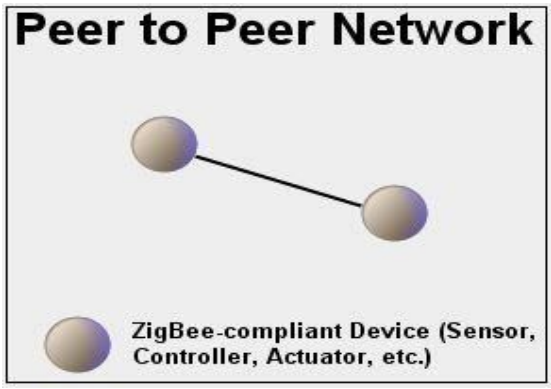

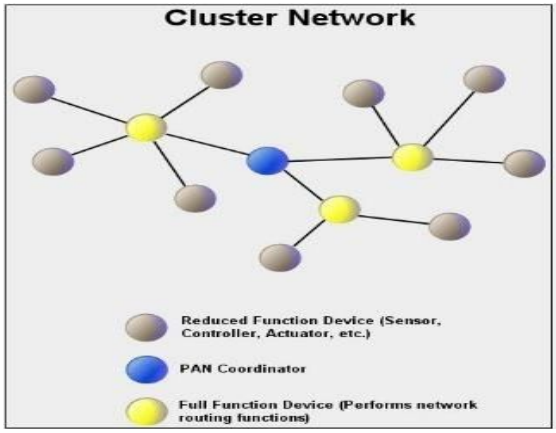

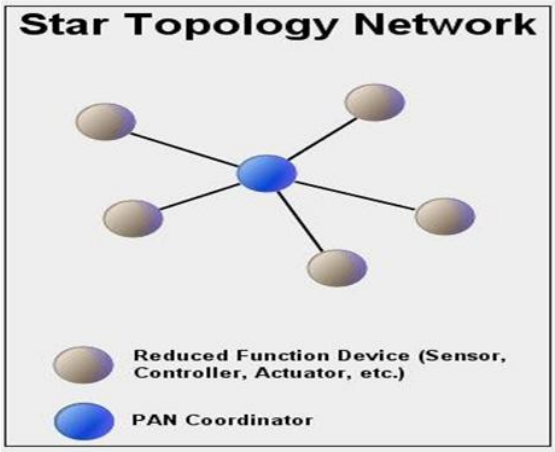

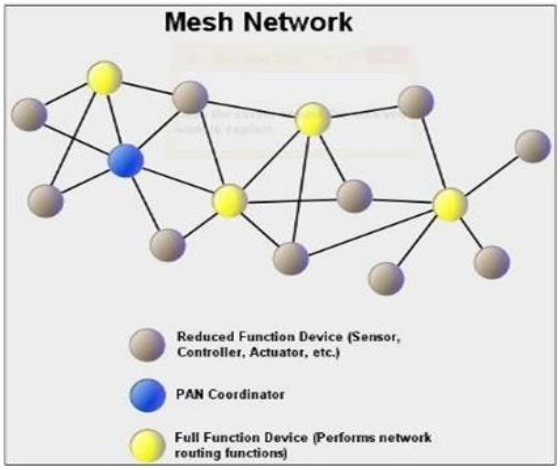

Design of ZigBee transmitter

This section describes the implementation of ZigBee transmitter system. The implementation was built on Matlab/Simulink using fundamental components in Simulink to demonstrate how reliably complex modulation schemes can be built, cost effectively and efficiently. The design of ZigBee transmitter using OPQSK modulation with half sine wave pulse shaping is shown. Here the input bit stream having a data rate of 250Kbps.

Step by step procedure to implement ZigBee transmitter using Simulink is given below:-

1. **Bit to symbol and symbol to chip mapping**
i. Generating binary data stream
ii. Generating PN sequence
iii. Generating DSSS signal

2. Series to parallel converter implementation
3. Performing half sine pulse shaping
4. Performing Modulation
5. Output of the ZigBee transmitter

Design of ZigBee receiver

This section describes the implementation of ZigBee receiver system.Here we are concentrating on the MSK coherent detection technique for recovering original data in receiver.The step by step procedure to implement Zigbee receiver using Simulink are:-

1. RF to Baseband conversion
i. Multiplying with RF carrier
ii. Multiplying with half sine wave
iii. Low pass filtering

2.Sampling and thresholding
i. Sampling
ii. Thresholding

3. Parallel to serial conversion

4. Despreading

III. SIMULATION RESULTS

1. At the transmitter end

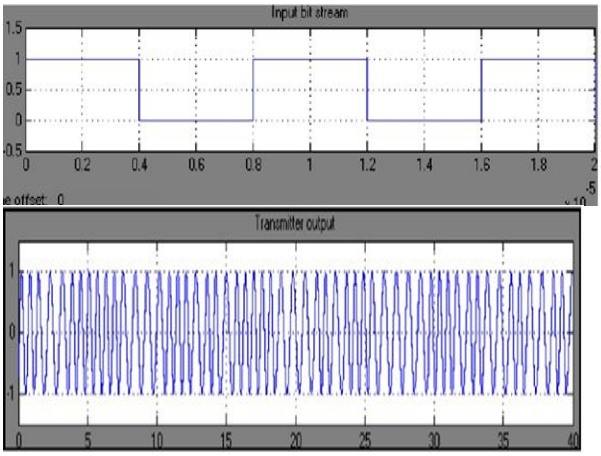

2. At the receiver end

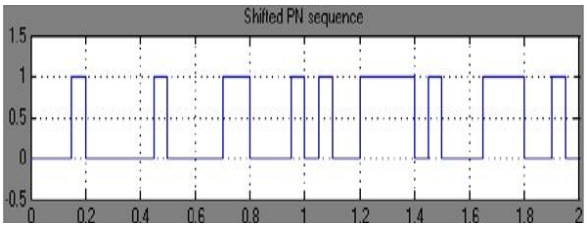

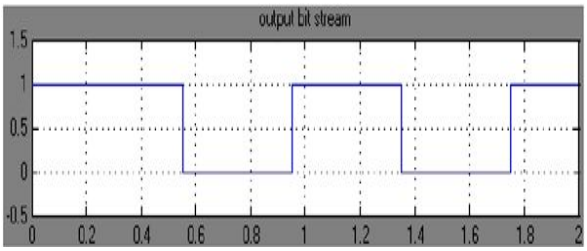

IV. TRANSMITTER

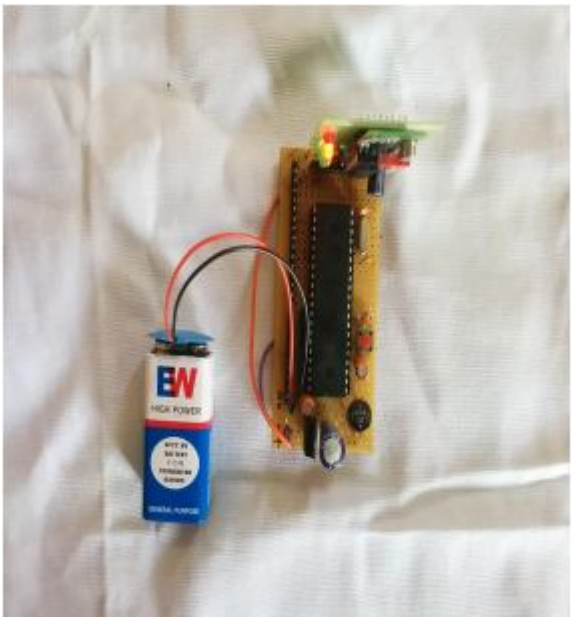

V. RECEIVER

VI. TRANSCEIVER CIRCUIT DIAGRAM

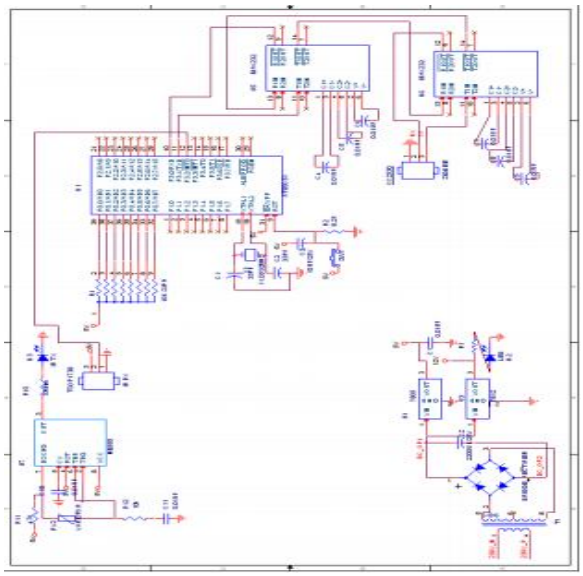

VII. FUTURE WORK AND SCOPE

The simulations done are in Simulink but it can be extended to real time scenario through Verilog HDL. Furthermore more applications of ZigBee can be found in sectors dominated by other wireless technologies.In the use of ZigBee as a monitoring system, wireless communication can be done through better data compression algorithms such as SPIHT algorithm and other such techniques. Furthemore, flexibility of ZigBee operation along with other wireless technologies is required for growth of this wireless standard.

REFERENCES

[1] ZigBee Alliance.(2006,December)ZigBeeSpecification

[2] Chi-Chun Huang, Jian-Ming Huang, Chih-Yi Chang and Chih-Peng Li Chua-Chin Wang, "ZigBee 868/915-MHz Modulator/Demodulator for Wireless Personal Area Network," IEEE transactions on Very Large Scale Integration(VLSI) systems, vol. 46, pp. 936-939, July 2008

[3] K. Shuaib and I. Jawhar M. Alnuaimi, "Performance Evaluation of IEEE 802.15.4 Physical Layer Using Matlab/Simulink," in Innovations in information technology, Nov 2006, pp. 1-5.

[4] Farahani Shashin, ZigBee wireless networks and Transceivers. Amsterdam, USA: Newnes publications, 2008.

★★★