International Journal of Electrical, Electronics and Data Communication, ISSN(p): 2320-2084, ISSN(e): 2321-2950
Volume-7, Issue-10, Oct.-2019, http://iraj.in

NEURAL NETWORK BASED BLDC MOTOR SPEED CONTROL

[1]NIKHIL S. SHELKE, [2]SAMPATH KUMAR

[1,2]Department of Electrical, Fabtech College of Engineering & Research, Sangola
E-mail: [1]nikhilshelke27@gmail.com, [2]sampathukumar@gmail.com

Abstract - Brushless DC (BLDC) motors are widely used for many industrial applications because of their high efficiency, high torque and low volume. The aim of this research is to develop a complete model of the BLDC motor and to design an optimal controller for its speed control. Brushless DC (BLDC) motor control system is consisted of a multi-variable, non-linear, strong-coupling system, which is used to present robust and adaptive abilities. The interest in emerging intelligent controller for BLDC motor has been increased significantly. Neural Control is an ANN (Artificial Neural Network) based control method whereby the available data is the result of measuring the dynamic behavior of the system. This capability is well suited to be applied to adaptive control systems where the controller requires adaptation due to changes in system behavior. ANN was used to build the inverse model of BLDC motor speed control. This model was then used as controller.

Keywords - BLDC Motor, BLDC Motor Speed, ANN, Neural Control.

I. INTRODUCTION

A brush less dc motor is also known as a permanent magnet synchronous machine with rotor position feed back. These brushless motors are generally controlled by using a three phase bridge power semiconductor device.

BLDC motor has advantages over other motors as it consist of high productivity, high power factor, precise speed and torque control. BLDC motor has become predominantly noteworthy in applications, for example, electric trains, electric car, flight and mechanical autonomy. The traditional controllers (PID and PI) are commonly connected for control activities in different motoring works. These are steady increase controllers and require exact procedure demonstrate for their design. The Brushless dc motor is an exceptionally non-direct motor and regularly it is hard to guarantee exact mathematical display. This motor consist of Electronically operated commutator which is mounted on primary winding. Moreover, the inward parameters like obstruction and inactivity of the motor withdraw from its true esteem because of progress in encompassing temperature condition and expanded burden condition individually. The customary controllers display debased execution because of this adjustment in the inner parameters of the motors. Savvy and versatile controllers that can perform agreeably under a wide scope of conditions. Demonstrate reference versatile control procedure is one among different accessible ways to deal with versatile control. The standard thought behind model reference versatile control is to structure a shut circle controller with movable parameters to such an extent that the conduct of the plant to be controlled pursues the conduct of a reference demonstrate.

Fake Neural Networks (ANN) has a huge extension in control framework applications because of the various points of interest offered by them. Its high learning attribute and non-direct mapping highlights offer a desired non-straight mapping for an electric drive without going into the framework unpredictability. ANN is utilized to fabricate reverse model of BLDC motor speed. This model was then utilized as controller. So as to acquire control conspire that have great powerful reaction show neural versatile BLDC motor speed control connected. The model reference versatile frameworks (MRAS) have a parameter modification component alongside the typical criticism circle and henceforth give better arrangements when there are varieties in procedure parameters. Neural systems (NNs) with their learning abilities and adaptation to internal failure have turned out to be a promising arrangement in evaluating and controlling nonlinear frameworks. By utilizing Model Reference Neural Adaptive Control the speed of motor can be controlled effectively. On the offchance that we need to control speed of motor effectively, at that point we need to actualize this proposed framework.

Brushless dc motors are utilized in such huge numbers of utilizations. BLDC motor is commonly utilized in household works, for instance clothes washer, toys. BLDC motor is utilized in businesses and operations carried out on, transportline, requires the BLDC motor. Speed control of the BLDC motor is fundamental for making the motor work at wanted rate. Speed of BLDC motor can be constrained by controlling input DC voltage and current. The regular controllers (PID and PI) are commonly connected for control of speed. It is difficult to tune the PID parameters and gain fulfilled power attributes by utilizing ordinary customary PID controller. Also it has extensive reaction time, require more space. System with PI Controller have overshoot issue. So that, in this task, the Model reference neural versatile controller is utilized for appropriate controlling of criticism current and power. It will help the motor for quick and productive working. We know the significance of input circle or shut circle. For the most part, shut circle is utilized in any framework to diminish the mistake in flag.

II. LITERATURESURVEY

The creator proposed consolidating novel model reference versatile control (MRAC) and neural system(NN) to accomplish high following accuracy for servo frameworks. Broke down impact of non-direct and dubious factors on the execution of the plant. The neural system is utilized to repay the impacts brought about by non-linearity and vulnerability in this manner the blunder between the speed circle and the reference model can be decreased. To clarify adequacy of the proposed control conspire, tests were conveyed in a 3-hub pilot test program. Tests results show that the proposed control plan can decrease the plant's affectability to parameter variety and unsettling influence and improve the following execution successfully. [1]

The creator proposed neural system based model reference versatile control approach (MRAC) for ship directing frameworks. For the nonlinearities of ship directing framework, exhibitions of conventional versatile control calculations are not acceptable. The introduced MRAC framework uses RBF neural system to rough the obscure nonlinearities so as to get a high versatile control execution. Creator likewise talked about solidness of the framework with Lyapunov steadiness hypothesis. Reenactment additionally demonstrates the adequacy and superior of the proposed calculation. [2]

Ordinary PI controller. Neural system improves speed reaction and furthermore decreases torque swells. By utilizing this controller, its yield dependent on a lot of guidelines to keep up fantastic control execution even within the sight of parameter variety and drive non-linearity. This basic plan has altogether improved the execution of the BLDC framework while in the meantime keeping up the basic control structure of the BLDC. Matlab/simulink programming was utilized to reenact the proposed plan. [3]

The creator proposed a control technique of RBF neural system PID in light of the fact that regular PID controller is hard to meet the execution necessities of BLDC motor Author examined its execution both tentatively and by reproduction when the framework is exposed to step change in reference speed and unexpected burden unsettling influence. Different control framework parameters for the two controllers have been estimated, broke down and thought about. The examination demonstrates obviously that the proposed controller gives better exhibitions.

The author discussed about brushless dc motor drive framework with two kinds of speed controllers in particular PID for the comparison of spped with the ANN.[4]

The dynamic conduct of the drive framework with the two controllers are exhibited and analyzed for a speed operation. It is seen that ANN control based system gives much better output than the conventional PID controller. The waveforms for stator current, rotor speed, torque and backemf were contemplated in correlation with the Proportional Integrated Control of BLDC motor drive.[5]

The creator gives the data about displaying and control of Brushless DC (BLDC) motor utilizing the PID control with hereditary calculation. He clarifies the upsides of proposed Control of Three Phase BLDC Motor utilizing PID with Genetic Algorithm. The creator clarifies the correlation between responsel of Three Phase BLDC Motor utilizing PID with Genetic Algorithm and Ziegler Method and furthermore the MATLAB reenactment results. [6]

The creator proposed Model reference versatile sliding mode control (MRASMC) utilizing radical premise work (RBF) neural system (NN) to control the single-stage dynamic power channel (APF). The creator further used The RBF NN to estimated nonlinear capacity and takes out the demonstrating blunder. It is inferred that AC side model reference versatile current controller not just certifications the comprehensively solidness of the APF framework yet additionally create the repaying current to follow the consonant current precisely. [7]

Creator proposes a control methodology dependent on fake neural systems (ANN) for a situating framework with an adaptable transmission component, considering Coulomb grinding for both motor and burden, and utilizing a variable learning rate for adjustment to parameter changes and to quicken union. In this structure, the learning rate of the criticism ANN is delicate to stack inactivity varieties. [8]

The creator exhibited a MRAC framework which uses RBF neural system to sumerised the obscure nonlinearities so as to get a high versatile control execution. In light of the Lyapunov solidness hypothesis, the refreshing law for the RBF neural system and down to earth strength are dissected, which considers the neural system learning mistake. Numerical recreation was done to demonstrate the handy practicality and execution of the proposed neural system based versatile control calculation.[9]

The creator has demonstrated that NMRAC ready to follow any adjustments in reference display reaction and to fortify the proof over, the time steady of reference demonstrate was changed from 200s to 550s and NMRAC has indicated great execution in controlling temperature as per want reference show. Demonstrate reference for versatile control is planned utilizing first request in addition to dead time (FOPDT) exchange work. The loads of neural system are refreshed utilizing Recursive Prediction Error Method (RPEM). The execution of neural system is looked at utilizing changed number of concealed layer, energy rate and learning rate.[10]

II. PROPOSED SYSTEM

BLDC motor is getting to be renowned step by step. As its name shows that brushes are killed for the replacement. BLDC motor has a greater number of

points of interest than an acceptance motor. Torque of BLDC motor is higher than different kinds of motor.

BLDC motor goes under the sorts of synchronous motor. Synchronous methods the attractive field made by stator and rotor turns at a similar recurrence. Enlistment motor may go under synchronous motor however it has slip. Be that as it may, BLDC motor has no slip in it. BLDC motor might be 1 stage, 2 stages, 3 stages. Stator is comprising of steel covers and openings are filled by winding. 3-stage winding is associated in star association. Loops are put in the openings and they are interconnected with one another to shape a winding. This winding is conveyed over the stator outskirts to shape a considerably number of posts. The idea of back EMF might be trapezoidal or sinusoidal. It is relying upon the stator winding.

Each twisting of motor creates back EMF which restricts the voltage provided to the winding. Back electromotive power acts inverse way of the mail voltage connected by the utility.

Back EMF = (E)=NlrBm (1)

Where,

N-No. Of winding turns per phase l- Length of the rotor

r- Radius of rotor

B- Magnetic flux density of rotor ω- Angular velocity

Motor having sinusoidal back EMF have smoother torque than motor having trapezoidal back EMF. In any case, this kind of motor requires more copper to make additional interconnection of loop in stator. With the goal that the expense additionally increments. In any case, smoother torque could easily compare to cost. 48V or not as much as that voltage rating motor is utilized in car, apply autonomy. Also, motor of 100 V is utilized in car, enterprises.

Rotor comprises of lasting magnets and number of post sets. (May be 2, 4, 8). Attractive material is picked relying on its prerequisite of attractive field thickness. By and large, ferrite magnet is utilized. Presently days, uncommon earth combination magnets are getting to be prominent. (Samarium cobalt, neodymium, ferrite and boron are case of earth compound magnets).Alloy magnets have high torque; high attractive thickness and it improve the size and weight of motor. To make activity increasingly solid, progressively productive and less loud the BLDC motor is utilized. Brushed motor can likewise give same power yield at the same time, brush in this motor may cause starting and it additionally needs upkeep, in this way brushed Dc motor is failing to be utilized for activity that request long life and dependability. Brushes may leave time (for example short life time). Rotor of BLDC motor is changeless magnet. Stator has curl course of action as appeared in fig. By giving capacity to the loop, the curl will empower and progress toward becoming electromagnet. Activity of BLDC dependent on straightforward activity between lasting magnet and electromagnet. In this condition when loop An is empowered, the contrary shaft of motor and stator pulled in to one another as motor achieves curl A, loop B is stimulated and as motor achieves curl B, curl C is invigorated. After the empowered with the contrary extremity this procedure is rehashed and motor nonstop to turn. Despite the fact that this motor works it has opposite downsides, we canseethatatanymomentjust1curl is invigorated. The 2 dead loops incredibly lessen the power yield of the motor. To defeat this issue it is possible that we can utilize 2 additional posts on rotor for example our rotor will have 4 posts (for example N-S and N-S) 2 sets of shafts.

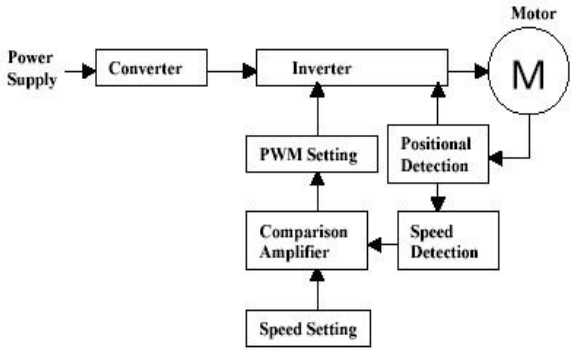

Fig. 1 Block diagram of BLDC motor system

At the point when rotor is in rest position alongside the first curl which constrain the rotor around then we can stimulate the loop behind it (for example curl behind the rotor). So that it will drive the rotor, at right now same extremity current is gone through the2ndcoil the consolidate impact lessens more torque and power yield from the motor they join compel additionally ensure that BLDC motor has a wonderful consistent torque nature. With this setup 2 curls should be empowered independently however by making a little alteration into the stator loop we can improve this procedures imply interface opposite power end of curls together. (B-B-A-A) Flow of current when control is connected between curl An and B. This resembles independently stimulated state. That is the manner by which BLDC motor works and we get consistent pivot of rotor.

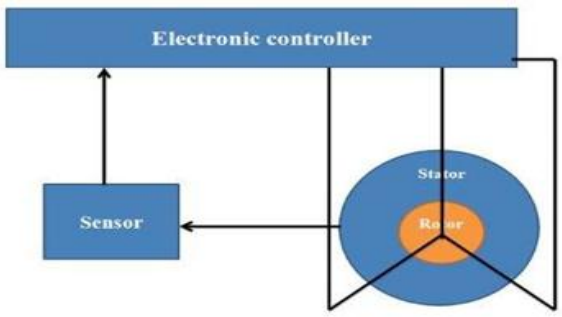

Fig. 2 Position of sensor

Sensor decides the situation of the rotor and dependent on this data the controller chooses which loops to invigorate. Regularly Hall impact sensor is utilized for this reason. BLDC motor referenced above is outs printer type. In BLDC motor, curlison stator (stationary part) and changeless magnets on the rotor. ANN is made out of components that copy the human natural sensory system. The system work is dictated by connection among components and it is prepared to construct a specific capacity. Preparing is directed by improving the weighted an incentive until the yield of ANN equivalent to the objective yield, this is called Supervised Learning. The Feed forward Multi-Layer architecture of ANN is shown in Fig.3.

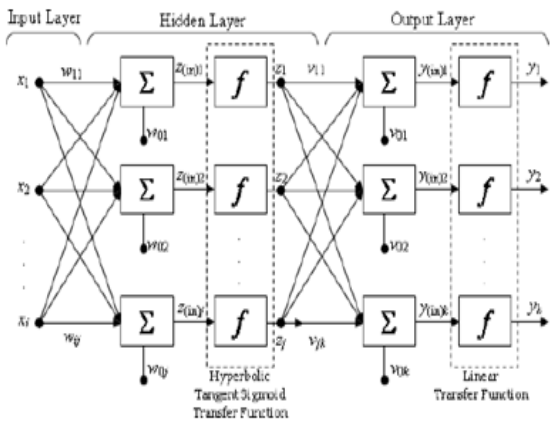

Fig. 3 Architecture of ANN

Back propagation algorithm tracks the weighted value to minimize network total error through training sets. Each iteration in back propagation algorithm can be expressed by:

$$w_{k+1} = w_k + \Delta w_k \quad (2)$$

$$\Delta w_k = -\alpha \frac{\partial E}{\partial w_k} \quad (3)$$

Where Δw_k is update weighted of k w and α: is learning rate ANN was use to build dynamic inverse model of BLDC motor. This model is then used as controller.

III. RESULT

i) Simulation of open loop system and result-

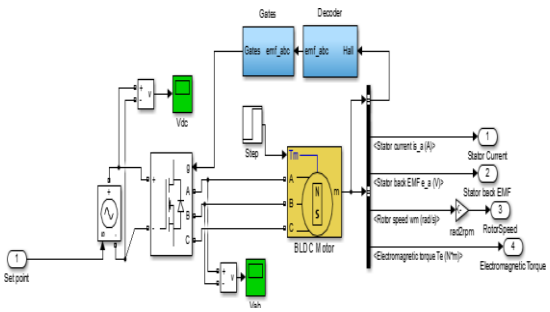

Fig. 4 Simulation dia. of open loop system

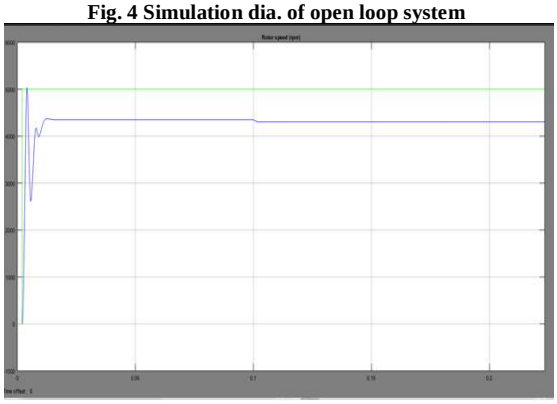

Fig. 5 Result of Open loop system

ii) Simulation of PID controlled system and result-

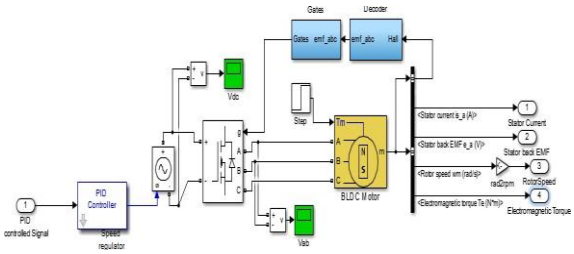

Fig. 6 Simulation dia. of PID controlled system

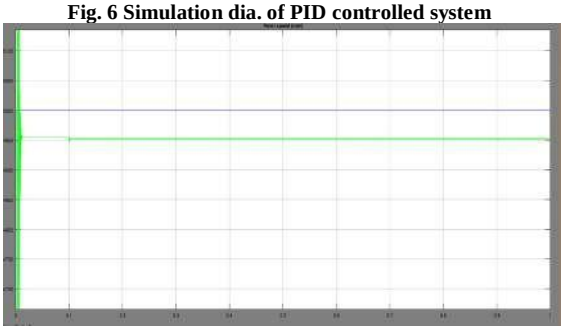

Fig. 7 Result of PID controlled system

iii) Simulation of ANN controlled system and result-

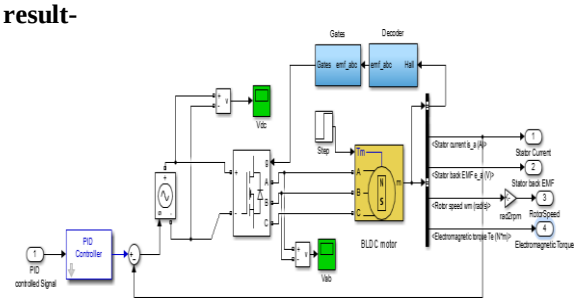

Fig. 8 Simulation dia.of ANN controlled system

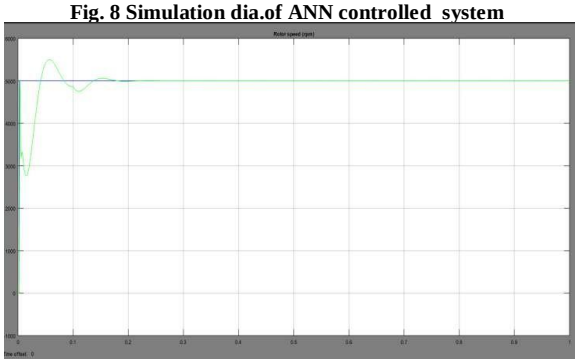

Fig.9 Result of closed loop system

Combined result of Open loop system, PID & ANN controlled system-

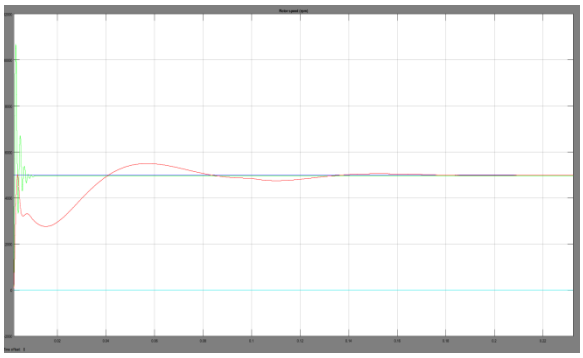

Fig.10 Combined Result of the system

Name of the system	Desired speed of the system	Actual speed achieved	Percentage error in speed
Open loop system	5000 RPM	4300 RPM	14%
PID controlled system	5000 RPM	4955 RPM	0.90%
ANN	5000 RPM	5000 RPM	No error

Table no. 1 Comparison of different systems with their actual speed

By observing the results of all three system i.e., open loop controlled, PID controlled and ANN controlled systemforspeedcontrolofBLDCmotor.Infig.5It is clear that in open loop system speed of the motor cannot be controlled but in fig. 9 by using ANN we can achieve the desired speed of the system which cannot be achieved in PID controller as shown in fig.7.fig

IV. CONCLUSION

Neural Control is an ANN based control method that requires only a set of data from measurement of system dynamics behaviour. This capability is well suited to be applied to adaptive control systems such as BLDC motor control system. ANN was used to build the inverse model of BLDC motor speed. This model was then used as controller. Performance requirement of BLDC motor is represented by reference model. Simulation result showed that the Model Reference Neural Adaptive Control produce the same system response with the reference model.

REFERENCES

[1] DidiSusilo Budi Utomo; AnsarRizal; Achmad Fanany Onnilita Gaffar, “Model reference neural adaptive control based BLDC motor speed control” 2007 IEEE International Conference on Control and Automation

[2] Patel Singh, A. K. Pandey," Modelling and Performance Analysis BLDC Motor and Difference Schemes of PWM Controlled BLDC Motor", International Journal of Scientific and Research Publications, vol. 3, no. 4, April 2013, ISSN2250-3153.

[3] G. Prasad, N. Sree Ramya, "Modelling and Simulation Analysis of the Brushless DC Motor by using MATLAB", International Journal of Innovative Technology and Exploring Motorering(IJITEE),vol.1, no. 5, October 2012, ISSN2278-3075.

[4] Tao Fu, Xiaoyuan Wang, "Desgin of Brushless DC Motor Controller Based on Adaptive RBF Neural Network", International Journal of Control and Automation, vol. 9, no. 1, pp. 459-470,2016.

[5] S. Sivakotiah, J. Rekha, "Speed Control of Brushless DC Motor on Resonant Pole Inverter Using Fuzzy Logic Controller", International Journal of Motorer in Science and Technology, vol. 3, no. 10, pp. 7360-7357,2011.

[6] K. Wang, M. A. Rahman and J. X. Shen ,”Control of High-Speed Sensorless PM Brushless DC Motors,” Journal,2010.

[7] Wang Xing-gui and Liu Qi, “Permanent Magnet Linear Brushless DC Motor Position Control system Based on Single neuron,” 2010 International Conference on Networking and Digital Society.

[8] Yuanyuan Wu, Zhiquan Deng, Xiaolin Wang, Xing Ling, and Xin Cao,” Position Sensorless Control Based on Coordinate Transformation for Brushless DC Motor Drives,” IEEE TRANSACTIONS ON POWER ELECTRONICS,VOL. 25, NO. 9, SEPTEMBER 2010.

[9] Padmaraja Yedamale, ”Brushless DC (BLDC) Motor Fundamentals,” Microchip Technology Inc.,2003.

★★★