International Journal of Electrical, Electronics and Data Communication, ISSN(p): 2320-2084, ISSN(e): 2321-2950
Volume-7, Issue-2, Feb.-2019, http://iraj.in

AUTOMATIC SOLAR TRACKER USING MSP430 MICROCONTROLLER

[1]KARTHIK S MURTHY, [2]PARULHERUR, [3]ADITHYA B R, [4]HARSHITA LOKESH

B N M Institute of Technology, Electronics and Communication Department
Bangalore-560070, India
Email: [1]karthikksm97@gmail.com, [2]parulherur2910@gmail.com, [3]adithyaa37@gmail.com, [4]harshitalb97@gmail.com,

Abstract- Renewable resource is a natural resource which reduces the resource depletion caused by excessive usage and consumption. It forms the major part in the ecosphere. Some of them are sun, fresh water, wind etc. Out of all these solar energy tops the list, since it is more efficient and can be easily converted to other forms. We can't expect maximum power from a stationary panel. In order to maximize the output power, the solar panels must be in phase with the sun. By using panels that can be rotated along an axis, with respect to the position of the sun, we can improve the efficiency of conversion by at least 40-50%. This paper proposes exactly the same idea where in a solar tracking system is designed with the help of MSP430 micro controller which is programmed to track the sunlight and to make sure that the solar panel is made to receive a great volume of sunlight and help in generating a considerably large amount of power.

Keywords- Renewable Resource, Solar Energy, Stepper Motor, Solar Panel, MSP430

I. INTRODUCTION

Energy Crisis is one of the major global problems. The demand for energy is increasing rapidly and this in-turn makes us highly dependent on fossil fuels and other non-renewable resources. Though they seem to be available in abundant, we will eventually exhaust them. It is high time we tend to renewable resources to satisfy our growing demands. Solar Power and Hydrogen gas are the main sources when we think of clean and renewable power. Solar energy is literally available for free by the sun; we just have to employ our solar panel and other technology to capture and utilize it to produce electrical energy for our needs. There is no emission of gases or release of any toxic waste as a result of conversion of solar energy to electrical energy, so it will be the best alternative for fossil fuels if we can improve our technology and minimize the cost of production of solar panels.

This paper proposes a prototype using an already existing solar panel technology to change the orientation of the solar panels according to the direction of the sun to increase its efficiency. Why do you think sun flowers always point towards the direction of the sun? In simple words, it is to increase its productivity. The same concept is used in this prototype where the solar panel changes direction so that the sunrays are always perpendicular to the panel [1]. Having a tracking solar panel is supposed to have 25% to 45% more efficiency when compared to the stationary ones. The hurdle in designing this panel is to make it efficient enough to utilize less power to track the sun and also produce more power by tracking the sun. Hence, care has to be taken that the module accurately tracks the sun based on the geographical location of the panel and always keeps it perpendicular to the sun in that location [2]. The inclination of the earth's axis and the geographical location pay an important role in the duration of daytime and night-time. Hence care has to be taken in the initial installation angle and timing of the motor rotation of the solar panel. This paper, introduces a solar tracker where MSP430 is used as the core microcontroller. A stepper motor is also used along with the motor driver (ULN2003A). During cloudy days or during rainy seasons, it is hard to track the sun using a Light Dependent Resistor (LDR) and the whole systems fails if there isn't sufficient light to trigger the LDR. Therefore, it is more convenient to rotate the panel at specific intervals during the day and revert it back to the original position at night. The microcontroller is interfaced with the stepper motor and it is programmed to rotate the panel at regular intervals which corresponds to the direction of the sun. Care has to be taken in programming the microcontroller to the specific geographical location and also the initial installation of the panel at the appropriate angles so that the panel is always pointing straight towards the sun.

II. HARDWARE IMPLEMENTATION

A. MSP430 Microcontroller

The MSP430 belongs to the family of microcontrollers developed by Texas Instruments. There are six generations of this microcontroller starting from MSP430x1xx to MSP430x6xx and they have multiple families of microcontrollers [4]. This allows us to choose the microcontroller required for the specific application. MSP430 has 6 different low power modes and they are used for low power embedded devices [5]. The main features of Msp430 are:

1) Low power
2) Low cost
3) High Performance

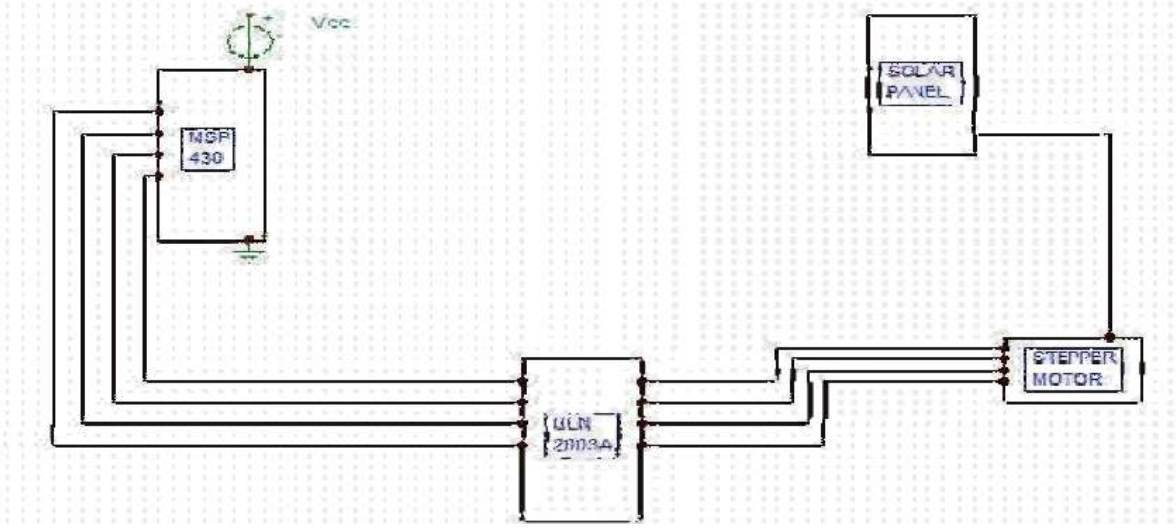

Fig.1 An overview of Solar tracking system

B. Solar panel

Solar Panel is device which absorbs the solar energy and converts this solar energy into electrical energy. They are made up of set of photovoltaic cells (PV cells). These PV cells are made up of silicon and are also called as solar cells. These solar cells are used to generate electrical energy by photovoltaic effect [11]. The solar cells are arranged together to form modules which are mounted on a structure. The generated electrical energy has to be stored since the energy generated is small and we use batteries to store the energy generated. The average efficiency of solar panels lie between 10% to 18%. Some of the advantages of solar panels are as follows:

1) Wear and tear are very less.
2) Helps to reduce global warming.

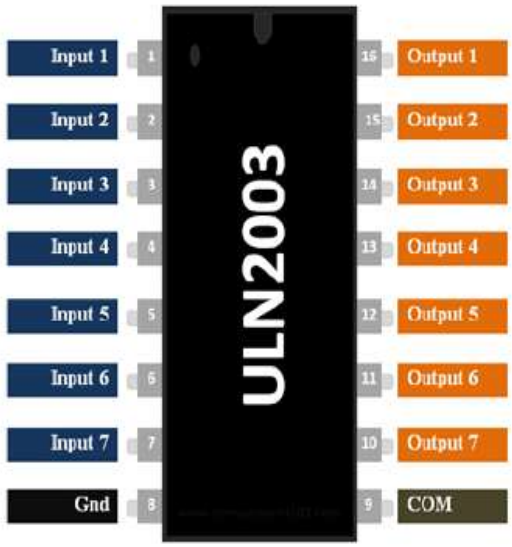

Fig.2 Pin diagram of ULN2003A

C. ULN2003A MOTOR DRIVER:

This motor driver is an array of transistors. The transistors used here are Darlington transistors of high voltage and high current. It consists of seven pairs of Darlington NPN transistors. These transistor pairs have to connected in parallel to obtain high current. The UNL motor drivers have been categorized into different families and ULN2033A belongs to the family of ULN200x series. ULN2003A is designed to withstand a current of 500mA but it can withstand a current up to 600mA. Each device also contains a supervision diode to dissipate voltage spikes while driving inductive loads [12] The features and applications of ULN2003A are as follows:

- Features: 500mA collector current, Output- 50V, compatible with different types of logics, example: TTL and 5 V CMOS.
- Applications: Used for interfacing with Stepper motors, Logic buffers, Line drivers,Relays, Lamp and LED displays etc.

D.STEPPER MOTOR:

We know that a DC motor has two carbon brushes which supports the motoring action. Stepper motor is something similar to a DC motor, except that it does not have any brushes which aresupporting the rotations. It is made up of windings, which are electromagnets. Several suchelectromagnets put together form the stepper motor. There are two main types of windings, statorwindings and rotor windings. Rotor windings is a rotating shaft, whose rotations is based on the electric potentialapplied to stator windings. This shaft is also known as a gear. This gear is made up of a number of magnets which we call as teeth. In a stepper motor, there issomething called the step angle. This is the angle by which the rotor changes its alignment betweentwo consecutive excitations of the stator teeth. If there are 60 stator teeth, then the minimum stepangle of that stepper motor will be 6 degree. The working of the stepper motor shows that the rotor movesin integral steps and not continuously like a DC motor. Hence the name stepper motor.

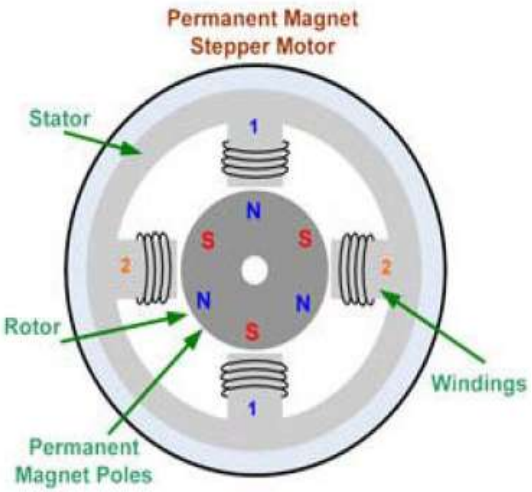

Fig.3 Inside of a stepper motor

Fig.5 Prototype of a solar tracker system for demonstration

III. PROGRAMMING METHODOLOGY AND WORKING

We have used CC studio (Code composer) studio which is an integrated development environment consisting of several tools for developing and debugging embedded system applications which enables the software to run on the firmware. We have utilised embedded C to program the microcontroller because of its compatibility with TI microcontrollers (MSP430). In MSP430, we use pins 1.1,1.2,1.3 and 1.4 as output pins which is used to supply power to the stepper motor used. We have utilised a stepper motor as it helps us to rotate our panel in terms of predefined steps and predefined step angles. However, since the output current of MSP430 is in terms of milli amperes which is insufficient to drive the motor we have utilised a motor driver ULN2003A.This step up the output current and voltage such that the motor receives sufficient power for it to be driven.

We require four input signals to excite the four windings of the stepper motor are connected to the four output pins of MSP430 the motor driver's (ULN2003A) input pins. The MSP430 is powered up from pin Vcc. The output pins of ULN2003A is connected to the 4 input windings of the stepper motor; say windings A, B, C, D. Utilising the internal clock of MSP430 we have programmed the microcontroller such that it outputs power every hour because of which the stepper motor rotates every hour only. This has been effectively programmed such that the delay between two consecutive steps of the stepper motor must amount to 60 minutes. the motor is set to rotate by an angle 7.5 degree thus completing 180 degrees in the pre-anticipated time interval. From dawn at around 6am in the morning, the stepper motor begins its rotation and rotates till about 6pm in the evening. Thus, the motor is able to rotate the panel from east direction in the morning to west direction in the afternoon thus harvesting maximum amount of solar energy. After the sun sets, that is after 6pm the motor is programmed such that it returns to its initial position and is ready for the next day's process all over again. The initial installation of the panel is done by taking into considerations the geographic coordinates of the panel and must be henceforth placed at an appropriate angle. This project thus when implemented is capable of increasing the power generated by the solar panels and harvest the sun's energy as much as possible albeit the motor and the control system involved consumes some portion of the power generated. The flow chart depicting the above working is shown below in Fig 6.

CONCLUSION AND FUTURE WORK

In the proposed paper we are trying to build a universal solar tracking device. Here we try to maximize the output of solar panel by making it align with the sun depending on the position, by pointing the panel in the direction of maximum light intensity, which is demonstrated using a working model. The proposed model could track the movement of sun with the help of micro-controller and stepper motor. Here we make use of MSP430 micro-controller since it is more efficient irrespective of the weather condition or the geographical location. One of the advantages of this system is that even if the weather is cloudy or even if it is raining the position of the sun does not change and hence the sunlight that is available is still received by the solar panel. The proposed system is just a prototype of the main model, hence there are some limitations. For practical purpose we need bigger stepper motor with gear box Here, we have considered only one-dimensional rotation of the panel. Though there are a few limitations in the hardware in the initial set up, there is room for more improvement of design methodology in the future.

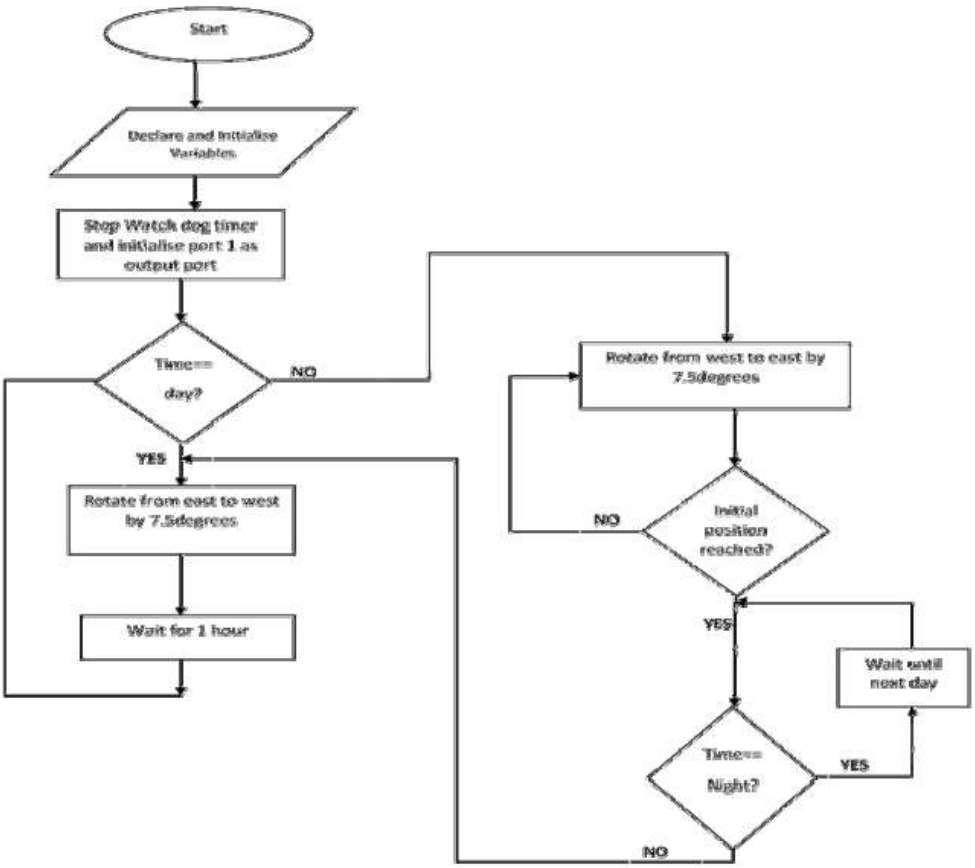

Fig.6 Flow Chart

ACKNOWLEDGMENT

This project was supported by Innovative Project Labs of BNMIT Bengaluru, India.We express our gratitude towards our beloved lecturer Mrs. Chaitra Nagaraj, Assistant Professor, BNMIT for providing us stupendous support and assistance. We also thank our department for providing the necessary lab assistance and constant encouragement in completing this paper.

REFERENCES

[1] A.T. Kearney and ESTELA (European Solar Thermal Electricity Association) (2010), Solar Thermal Electricity 2025, A.T. Kearney GmbH, Düsseldorf, Germany, www.estelasolar.eu.

[2] http://www.rsc.org/journals-books-databases/about-journals/energy-environmental-science/

[3] http://energyinformative.org

[4] Texas, Instruments. "ULN2003A Datasheet" (PDF).

[5] Embedded Systems Design with the Texas Instruments MSP432 32-bit Processor Mitchell A.Thornton, Southern Methodist University

[6] Reduced Instruction Set Computers - David A. Patterson-Computer Science Division, University of California, Berkeley, CA

[7] Robot Builder's Bonzana-Gordon McComb McGraw-Hill,Fourth Edition

[8] http://www.yankong.com

[9] SolarCity Unveils 'World's Most Efficient' Panel, by Justin Worland October 2, 2015,Time

[10] "Milestone in solar cell efficiency achieved New record for unfocused sunlight edges closer to theoretic limits",May 17,2016,University of South Wales

[11] www.investopedia.com/terms/r/renewable_resource.asp

★★★