SENSOR NETWORKS

IMOH JOSHUA IDARA

School of Engineering, Design and Technology University of Bradford

Abstract- Sensor network are said to be group of specialized transducer or device, which normally responds to physical stimulus such as (sound, light, pressure, heat) and then turns this qualities into a recordable signals such as (mechanical and electrical signals). Sensor network consist of multiple detection stations called nodes, each node in a sensor network is typically equipped with a radio transceiver or wireless communication device, a small microcontroller, and an energy source. Sensor network plays a major rule in transportation management, medical area and especially in security doors. The platforms in which sensor operates on are hardware computing platform, transducers, operating system, and communication modules. Sensor network has so many applications such as industrial automation, in health care, automation and smart homes, video surveillance etc. Sensor networks are used to monitor complex phenomenon. There are so many areas in sensor networks such as the sensor network design and operation, platforms in which the operate, the application, and power management etc. This research work is going to explain the different areas. Sensor networks are categorize into two parts namely wired and wireless sensor network, but am going to talk more on wireless sensors networks because of its relevance in the society today. This paper concludes on making sensor networks better in the nearest future.

Key words- Sensor Networks, Their Platforms, Applications, Types

I. INTRODUCTION

Sensor networks basically operate on the principles of a transducer and can also act as a transceiver because sensors are made up of set of specialize transducer. These transducers can transmit and receive signal because of the radio transceiver or wireless communication device and a small microcontroller in the sensors. The sensor senses an input signal which could form sound, heat, light, and converts it to output signal which are called analog signals and this is done by system instrumentation. The incorporating of microelectronics and microprocessor technologies into sensors has enabled bigger functionality such as smart and digital communication capabilities to be built into the sensors [1].

Sensor network emerged from the military because it was mostly used as a mean of defense to watch over the opposite side, the two programs that form the (DARPA) i.e. defense advanced research project agency where: the distributed sensor network (DSN) and sensor information technology (SENIT). Now sensor networks play a major rule in the military [2].

Traditionally sensor technology was characterized by large transducers, highly capable processing platform, complex signals and data processing software. But recently engineers have device a means of making the sensors to operate independently for long period of time i.e. (month to years) with non renewable power supplies. This days sensor technology has developed some in such a way that the sensors are now smaller with the transducers working more effective, it can also be because they are being equipped with sufficient computing capabilities to run while on motion [5].

Sensor Networks have gained a lot of attention recently. Due to technological advancement, building small-sized, energy-efficient consistent devices, capable to communicate with each other and also organizing themselves in ad hoc networks being made possible [2]. Sensor networks monitors setting at diverse locations, such like temperature, moisture, vehicular movement, lightning condition, pressure, soil frame, sound level. Generally sensor nodes consist of these components: sensing, processing and communicating [2]. Based on communication principle, sensor networks are wireless ad hoc.

Network formed by nodes which communicate with the existing nodes over a wireless pathway. Nodes in the network oblige to sending data regarding each other. An essential desirable total property of such a wireless ad hoc network is that it is connected, i.e., it constitutes a connected grid [3]. A network consists of several nodes, each with collection of links, linking to other nodes, information flows hop by hop along a path from the spot of production to the point of use. In a wireless network like the Internet, each router connects to a precise set of different routers, forming a steering graph. In sensor networks, each node has a radio that transfers a set of communication links to the close by nodes [4].Sensor networks are not usually connected to a fixed power supply so it uses batteries as it main power supply which can last for years without failure. Sensor device in sensor network are resource constrained since they have restricted sensing capacity, processing power, and communication bandwidth. On the other hand, with a huge amount of such devices being deployed and aggregated above a large area, sensor network has extensive data acquisition and processing capacity. Thus, sensor networks are important distributed computing resources that can be shared by diverse users and applications.

II. ARCHITECTURE

Sensor networks consist of large numbers of nodes. single sensor nodes (or small, nodes)are connected to

different nodes within the surrounding area through a wireless network, and they use a multichip routing protocol to communicate with nodes that are spatially far, Sensor nodes also have inadequate computation and storage capabilities: a node has a general-purpose microprocessor to perform computation and little amount of storage capacity to save program code and data [6].The two commonly use types of communications channels are: wireless channel and sensor channel, Sensor nodes senses the stimulus (signals) created by events or other nodes over a sensor channeland further the detected signal to the cluster head, the cluster head then transfer the merged data to the other cluster head or to the sink nodes directly over a wireless channel [7].

Sensor network nodes organize themselves into an effective grid arrangement, in which the network nodes are divided into different cells. One node in each cell is distinguished as the cell administrator, to signify the cells in the network. All Cell heads in the network form a higher level grid and the residual nodes form a lower level grid. A set of virtual cells are aggregated to form a huge virtual group, which might consist of nodes from hundreds to thousands [8].

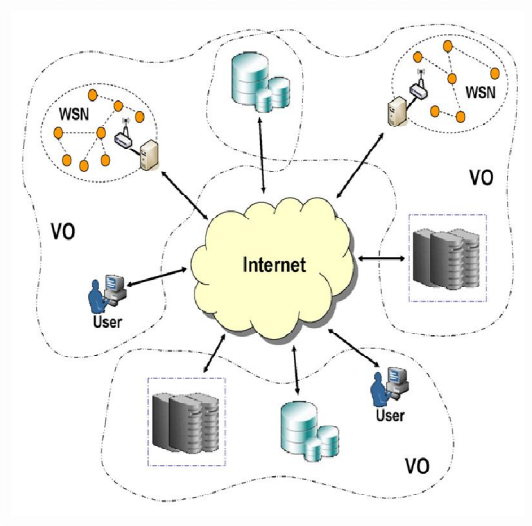

Fig1.1Organization of a sensor grid [9]

Figure 1.1 illustrates the organization of a sensor grid in terms of its resource components. A sensor grid consists of wireless sensor networks (WSNs) and conservative grid properties like computers, servers, and disk arrays for the processing and storage of sensor information. The properties in the sensor grid are shared by several Virtual Organizations (VOs). Actually, so resource might belong to more than a single VO. Users from various VOs may access the resources in the sensor grid, even though the resources are not owned by their VO [9].

A simple Sensor Network Nodes consist of the following components; microcontroller, transceiver, external memory, power source and one or more sensors. The diagram below shows the relationship between the components of a sensor node.

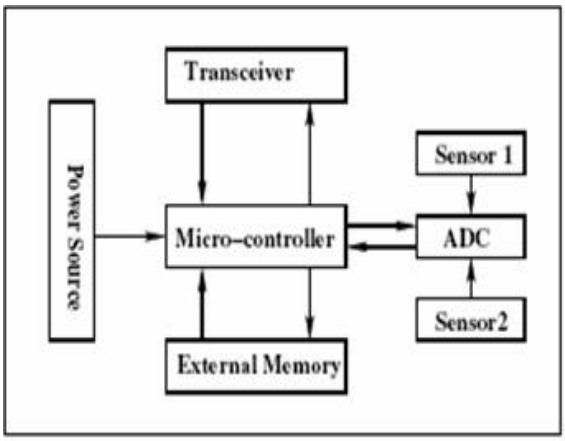

Fig1.2 a simple block diagram of a wireless sensor network

A. MICROCONTROLLER

Microcontroller performs tasks, processes data and controls the functionality of other components in the sensor node. Microcontroller consumes less power and is more suitable for sensor node. They are of better choice and has more advantage than the micro processor, because of its flexibility to connect to other devices and is easier to program. Digital Signal Processors (DSPs) are appropriate for broadband wireless communication.

B. TRANSCEIVER

Sensor nodes make use of ISM band which gives free radio, huge spectrum allocation and global availability. Radio Frequency (RF) based communication is the most relevant that fits to most of the Sensor Network applications. Sensor network uses the communication frequencies between about 433 MHz and 2.4 GHz. The functionality of both transmitter and receiver are combined into a single device know as transceivers are used in sensor nodes. The operational states are Transmit, Receive, Idle and Sleep.

C. EXTERNAL MEMORY

From an energy perspective, the most relevant kinds of memory are on-chip memory of a microcontroller and FLASH memory - off-chip. RAM is rarely if ever used. Flash memories are used due to its cost and storage capacity. Two categories of memory are mostly used for the purpose of storage a) User memory used for storing application related or personal data. b) Program memory used for programming the device.

D. POWER SOURCE

Power consumption in the sensor node is for the Sensing, Communication and Data Processing. More energy is required for data communication in sensor node. Energy expenditure is less for sensing and data

processing. The energy cost of transmitting 1 Kb a distance of 100 m is approximately the same as that for the executing 3 million instructions by 100 million instructions per second/W processor. Power is stored either in Batteries or Capacitors. Batteries are the main source of power supply for sensor nodes.

The sensor nodes are normally scattered in a sensor field. Each of these scatteredsensor nodes has the capability to bring together data'sand link them back to the sink. Data's are routedback to the sink with the help of a multichip infrastructure lessdesign through the sink as shown in Fig. 1.3 [10].

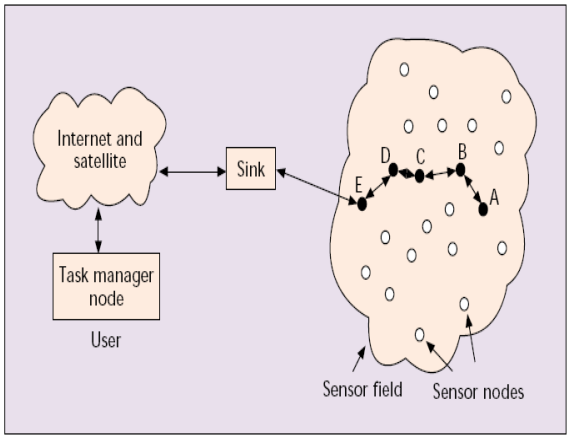

Fig 1.4 Sensor network scattered in a sensor field [10].

A sensor node consists of four fundamental components namely: the sensing unit, a processing unit, a transceiver unit and a power unit. The power unit is said to be the most important unit because without power the sensor network will not work. It is mostly preferable to use solar energy in case there is power failure in electricity. They nodes may also have application reliant to extra components such as a location finding structure, a power generator and a mobilize as shown in the diagram below [11].

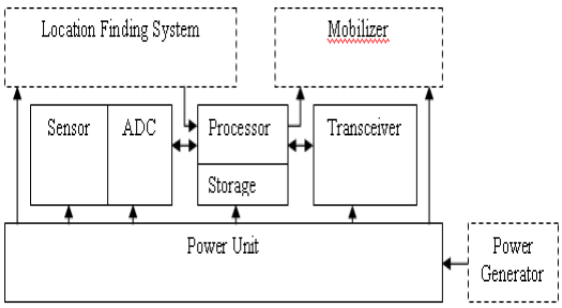

Fig 1.3 Component of sensor nodes [11]

Sensor networks hard ware consists of small sensor nodes with sensing, computation and communication capabilities. These sensors communicate using a wireless multi hop-Rf radio powered by small batteries. Most Sensor Network hardware is described in the following. They are mostly categorize into tiny nodes i.e. (mote, as explain in figure 1.4) [12].

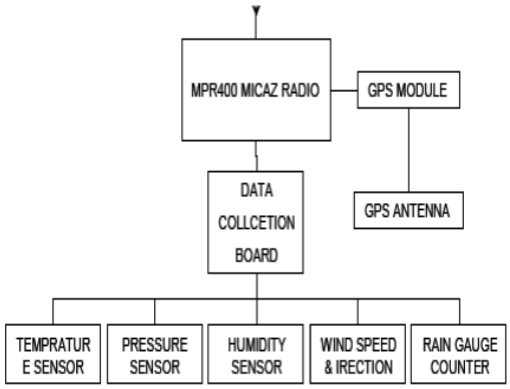

Fig1.5 block diagram of a sensor hard ware [12]

III. TYPES OF SENSOR NETWORK

There are different types of sensor networks, but base on my research work the commonly use sensor networks are visual sensor networks, sensor web and wireless sensor networks.

A. VISUAL SENSOR NETWORK

Visual sensor network is a network that is made up of spatially spread smart camera devices which are able to process and the fusing of images of a location from different angles into a form which is more valuable than the normal personal images [20].this network is generally consist of cameras which has communication system and storage capacities, it is the most efficient network that is being used in video surveillance and monitoring of the environment [20].

B. SENSOR WEB NETWORK

Sensorweb are known as geographic information system (GIS) that is particularly made for environmental monitoring [21]. Sensor webs are mostly used in harsh environments such as (deserts, mountain snow packs, and very cold region) for environmental science purpose [21].

C. WIRELESS SENSOR NETWORK

Wireless Sensor Network is a network which is made up of RF transceivers, sensors and nodes, machine controllers, microcontrollers, and user interface devices with at least two interacting by through a wireless media [22]. The wireless sensor network is made up of nodes and each these nodes is being connected to one or more sensors, each of these nodes consist of a transceiver, microcontroller, and electronics circuit which link them together [23].

There are a lot more types of sensor networks, but the few I have mention are the once that are more relevant in the society now.

IV. ENERGY CONSUMPTION OF SENSOR NETWORKS

Energy consumption is a major concern in sensor networks. Because wireless communication is a lot

more energy-consuming than sensing and computation, the transmission power of nodes should be properly maintain in such a way that the energy consumption is minimized so that it can extend the lifespan of the entire system [13]. Sensor nodes, are microelectronic device and can only be powered with a little power supply (< 0.5 Ah, 1.2 V).sensor nodes are fully dependence on battery life time, the misbehaving of some nodes in sensor network structure can result to major topological alteration and might entail reconnecting of system and reorganization of the network. Therefore, energy conservation and power management is very essential [10].

V. SENSOR NEWTWORK CONNECTIVITY

Connectivity in sensor networks are said to be in different forms and they broadcast domain which are made up of radios i.e. (both the receiving and the transmitting end) are in the last part of form. This radio helps the node to communicate from one to another over a wireless channel [4].

"One way to obtain a point-to-point communication link from a node I to a node j is to ensure that the ratio of the received signal power from I to the noise power at node j is greater than a certain threshold".[3] The two types of network topology mainly use are mesh network topology and star network topology. Mesh network is like a point to point network system i.e. it allows the transmission of signal between the nodes in the same radio frequency [14].

The advantages of network topology is that it is more efficient and reliable and the disadvantages are the high power consumption and its complexity while for the star network as the name implies it's a (single to multipoint) network. It is a network topology that allows data to be transmitted and received from a control unit, the advantage of this network is that it is easy to operate and it's consumes less power and the disadvantages is that it has a low transmitting power in order words the control unit (base station) must be with a close range [14].

VI. SENSOR NETWORK PLATFORMS

Sensor networks platforms operates in two platforms namely: hardware platforms and software platform. The hardware platform consist of the physical component embedded in the system such as the microprocessor, antennas, capacity and other component that made up of this system while the software part is basically the (o s) operating system in which the sensor operates on. The network sensor platforms operating system are not like that of the personal computer but there are tiny operating system and is being limited to the hardware nodes only [15].

VII. SENSOR NETWORK APPLICATION

Sensor networks applications are categorize into different types such as military, environment, health, home and other commercial areas [18]. Sensor network emerged from the military because it was mostly used as means of defense. Now development has taken place it does not only has function in the military it has different kinds of applications [16].Sensor network are mostly used in the battlefield operation such as detecting, locating, tracking, and tracking targets, it can also be used in situation and context awareness[human and computational devices] [17].

A. ENVIROMENTAL APPLICATION

Sensor networks in environmental application are use to monitor different habitat, agriculture development and also monitoring environmental surroundings which have an effect on crops and farm animals. [2] [18]. In environmental application, sensor networks are mostly used to monitor fire detection in the forest or farm, flood detection, humidity, temperature and the texture of the soil. This could be archived by installing a sensing device in each of these areas I mentioned previously to keep records of what happens daily so that the owner can take immediate action. "Imagine smart farmlands where literally every, vine plant will have its own sensor, making sure that it gets exactly the right nutrients, exactly the right watering. Imagine the impact it could have on difficult areas of the world for agricultural purposes." Intel Chief Technology Officer Pat Gel singer said [2].

B. HEALTH APPLICATION

Sensor network plays a big rule in healthcare unit. Most of the recent hospitals these days sensor networks are design to monitor patient physiological information, to manage the drugs administrations records and also to monitor patients and doctors inside the hospital for security reason [2][18].it also helps in enhancing emergency medical care i.e. (management in disaster area and transferring the patient involved).Sensor can be used to test the heart rate, oxygen saturation and serum chemistries measurements in the human system [19]. Sensor networks are also used to watch the movements and inner processes of insects and other domestic animals such as dogs and other pet's animals etc and keeps the records for future purposes [19].

C. HOME APPLICATION

Due to the advancement in technology smart sensor is being discovered and they are mostly used in sensor home, smart environment, smart kindergartens etc [2].Sensor are being used in smart kindergartens to learn about the behavior of children mostly in class rooms, it could be used as tags and to record voice in case there is any malfunction it reports to the central

immediately [19]. In smart homes smart sensors are being embedded into different appliances such as lighting systems, vacuum cleaners, micro wave, televisions and other electrical appliances, the sensors interact with each other through (WLAN) wireless land area network with internet or with satellite [18].A home can be fully automated with the help of smart sensor, this is easy to archive by embedding a sensing device to almost everything in the house and there should by a central data base station to control the entire system.

VIII. OTHER COMMERCIAL APPLICATION

Sensor could be used to monitor and control traffic on roads. For security purposes, it could be used to monitor movement and operations in banks and offices, in cars it could be used in the breaking system, security etc. Sensor network could also be used by the police force to trace lost items, restrictions and tracking of criminals.

IX. SENSOR NETWORK DRAWBACKS

The various issues affecting the full functionality of sensor networks are the hostile environments such as the battlefield, power restriction due to the size of the node, limited storage capability due to the security vulnerability [24]. To address some of this issues future research should consider pliability and scalability when designing the protocols, also the right device should be used so as to upgrade the topology instantly right after there's a change in the environment, this will aid in the reducing the power consumption from the node [24].

X. RECENT DEVELOPMENT

Apart from the recent developments of sensor networks in healthcare, smart homes, sensors networks is becoming the backbone for IoT (internet of things) which are used for environmental monitoring, transportation, security energy management etc. One of the most amazing developments is the sensor smart tracker; it's a low power Bluetooth tracker that helps find any lost items [25].

CONCLUSION

The rapid evolution of sensor network has brought about many new applications due to the small size of the sensing node which can be easily embedded into the sensing device, unlike the large transducer used in the early 90s. This new application hasmade sensor network more relevant in the society and to the end users. The challenges mostly experience is the power consumption, and this could be solve by putting into consideration the transmission power of the node during the installation in order to be able to minimize the energy consumption of the battery. Finally this research paper concludes on making sensor network better and more significant in the nearest future.

REFERNCES

[1] Kang lee,"sensor network and interface standardization", national institute of standard and technology, 100 Bureau drive stop 8220, Gaithersburg, Maryland 20899-8220 USA.

[2] Ying Miao, Prof Dr.-ing.Reinhard German, Dr-ing.Falko Dressler, "seminar wireless self-organization networks", Application of sensor networks, faculty of engineering science department of computer science 7 , computer network and communication system. Monday 02.05.2005

[3] Nikolaos M. Freris, Member IEEE, HemantKowshik, student member IEEE AND P.R.Kumar, Follow IEEE, Fundamentals of large sensor Networks: Connectivity, capacity, clocks and computation. Proceedings of the IEEE | Vol. 98, No. 11, November 2010

[4] David culler university of California, Berkeley, Deborah Estin and Mani srivastava, university of California los Angeles, "overview of sensor networks". Published by IEEE Computer Society in August 2004.

[5] Shashi/Phoha, Thomas Laporta, and Christopher Griffin, Sensor network operations. Wiley-IEE E Press | 2006

[6] Yong Yao and Johannes Gehrke Department of Computer Science Cornell University Ithaca, NY 14850 {Yao, johannes}@cs.cornell.edu, "Query Processing for Sensor Networks".

[7] Chuan Lin, Yan-Xiang He, Chao Peng, and Laurence T. Yang, 1School of Computer, Wuhan University, Wuhan, Hubei, China School of Mathematics and Statistics, Wuhan University, Wuhan, Hubei, China School of Information Science, Japan Advanced Institute of Science, Wuhan University, Wuhan, Hubei, China Department of Computer Science, St. Francis Xavier University, Antigonish, NS, 2W5, Canada. "A Distributed Efficient Architecture for Wireless Sensor Networks" .2007

[8] M.Asim, M. Yu, H.Mokhtar, and M.Merabti School of Computing and Mathematical Sciences Liverpool John Moore's University "ASelf-ConfigurableArchitectureforWirelessSensorNetworks" in 2010.

[9] Hock Beng Lim, YougMengTeo, Protik Mukherjee, vinhthailanweng Fai Wong, Simon See, Singapore-Mit Alliance, National university of Singapore. Sensor Grid: Integration of wireless sensor networks and the Grid. IEEE Computer Society Washington, DC, USA ©2005

[10] Ian F. Akyildiz, Weilian Su, YogeshSankarasubramaniam, and ErdalCayirci Georgia Institute of Technology,"a Survey on Sensor Networks". IEEE Communications Magazine August 2002.

[11] M.Ismail and M.Y.Sanavullah, Research scholar electronic and communication, vinayaga mission university, Salem professor and Dean, Dept of EEE, K.S.R Engr. College, Tiruchengode. Security Topology in wireless sensor networks, with routing optimization.

[12] Shi Lan, Miao Qilong School of Remote Sensing Nanjing University of Information Science & Technology and Jinglin Du School of Electronic & Information Engineering Nanjing University of Information Science & Technology."Architecture of wireless sensor networks for environmental monitoring". 2008 International Workshop on Education Technology and Training.

[13] Feng Xia, Faculty of Information Technology, Queensland University of Technology, Brisbane QLD 4001, Australia Sensors review on "QoS Challenges and Opportunities in Wireless Sensor/Actuator Networks", published on February 2008.

[14] Chris Townsend, Steven Arms micro strain, inc. Sensor network principles and application.10/2/2004.

[15] Reinhard Bischoff, Jonas Meyer and GlaucoFeltrin Structural

Engineering Research Laboratory, Empa, Swiss Federal Laboratories for Materials Testing and Research, D¨ubendorf, Switzerland,Wireless Sensor Network Platforms.

[16] S sitharamaIyenger and Richard R. brooks, Distributed sensor networks 2005 by chapman and Hall/CRC.

[17] David L. Hall, school of information sciences and technology (IST) inspiring solution through education, research partnership and community. Challenges and Opportunities inMulti-Sensor Data Fusion.IEEE IRI 2005.

[18] I.F. Akyildiz, W. Su,Y. Sankarasubramaniam and E. Cayirci,Broadband and Wireless Networking Laboratory, School of Electrical and Computer Engineering, Georgia Institute of Technology, Atlanta, GA 30332, USA, Wireless sensor networks: a survey, Received 12 December 2001; accepted 20 December 2001.

[19] Hans-Joachim Hof, Institute of Telematics UniveArsität Karlsruhe, GI-Dagstuhl-Forschungsseminar Nr. 05473, Algorithmenfür Sensor- und Ad-hoc-Netzwerke, “Application of Sensor Networks”, 23.-25. November 2005.

[20] Http://en.wikipedia.org/wiki/visual-sensor network.

[21] Http://en.wikipedia.org/wiki/sensor-web.

[22] Http:www.maxim-IC.com/glossary/deffinations.mvp/term/wsn/gpk/875.

[23] Http://en.wikipedia.org/wiki/wireless-sensor-network.

[24] http://webhosting.devshed.com/c/a/Web-Hosting-Articles/Wireless-Sensor-Networks-part-2-Limitations/1/

[25] https://www.sensornetworks.co.za

★★★